Sheet List

Sheet Number	Sheet Name	Sheet Issue Date	Drawn By	Checked By
A000	Sheet List	03/09/22	JV	Checker
A100	ADU 20X32 3D View	08/03/22	OD	Verificador
A101	ADU 20X32	08/03/22	OD	Verificador
A102	Section	02/01/22	JV	FT
A103	Section	04/08/22	JV	Checker
A104	Section	08/09/22	OD	Verificador
A105	Exterior View "A"	08/08/22	OD	Verificador
A106	Exterior View "B"	08/08/22	OD	Verificador
A107	Exterior View "C"	08/08/22	OD	Verificador
A108	Exterior View "D"	08/08/22	OD	Verificador
A109	Beam	02/16/22	JV / OD	Checker
A110	Foundation	04/08/22	OD	Checker
A111	Basement Lumbers	04/08/22	OD	Checker
A112	Panel Floor's	04/11/22	OD	Checker
A113	Panel Roof's	04/11/22	OD	Checker
A200	Quantities	01/06/22	JV	GG
A200.1	Quantities	04/08/22	OD	Checker
A201	Inside View "A"	04/11/22	OD	Checker
A202	Inside View "B"	04/11/22	OD	Checker
A203	Inside View "C"	04/11/22	OD	Checker
A204	Inside View "D"	04/11/22	OD	Checker
A205	Inside View "E"	08/19/22	OD	Verificador
A206	Floor View	08/22/22	OD	Verificador
A207	Roof View	08/22/22	OD	Verificador
A208	Shop Drawing WA-1, WA-2	08/22/22	OD	Verificador
A209	Shop Drawing WA-3, WA-4	08/22/22	OD	Verificador
A210	Shop Drawing WA-5, WA-6	08/22/22	OD	Verificador
A211	Shop Drawing WA-7, WB-1	08/22/22	OD	Verificador
A212	Shop Drawing WB-2, WB-3	08/22/22	OD	Verificador
A213	Shop Drawing WB-4, WB-5	08/22/22	OD	Verificador
A214	Shop Drawing WC-1, WC-2	08/22/22	OD	Verificador
A215	Shop Drawing WC-3, WC-4	08/22/22	OD	Verificador
A216	Shop Drawing WC-5, WC-6	08/22/22	OD	Verificador
A217	Shop Drawing WC-7, WC-8	08/22/22	OD	Verificador
A218	Shop Drawing WD-1, WD-2	08/22/22	OD	Verificador
A219	Shop Drawing WD-3, WD-4	08/22/22	OD	Verificador
A220	Shop Drawing WD-5, WE-1	08/22/22	OD	Verificador
A221	Shop Drawing WE-2, WE-3	08/22/22	OD	Verificador
A222	Shop Drawing WE-4, WE-5	08/22/22	OD	Verificador
A300	Wall 6"_Cutting Panel 1	08/24/22	OD	Verificador
A301	Wall 6"_Cutting Panel 2	08/24/22	OD	Verificador
A302	Wall 6"_Cutting Panel 3	08/24/22	OD	Verificador

Sheet List

Sheet Number	Sheet Name	Sheet Issue Date	Drawn By	Checked By
A303	Wall 6"_Cutting Panel 4	08/24/22	OD	Verificador
A304	Wall 6"_Cutting Panel 5	08/24/22	OD	Verificador
A305	Wall 4"_Cutting Panel 6	08/24/22	OD	Verificador
A306	Wall 4"_Cutting Panel 7	08/24/22	OD	Verificador
A307	Floor 6"_Cutting Panel 8-9	08/25/22	OD	Verificador
A308	Floor 6"_Cutting Panel 10-11	08/25/22	OD	Verificador
A309	Roof 8"_Cutting Panel 12-13	08/25/22	OD	Verificador
A310	Roof 8"_Cutting Panel 14-15	08/25/22	OD	Verificador
A311	Roof 8"_Cutting Panel 16-17	08/25/22	OD	Verificador
A312	Roof 8"_Cutting Panel 18-19	08/25/22	OD	Verificador
A313	Roof 8"_Cutting Panel 20	08/25/22	OD	Verificador

Grand total: 53

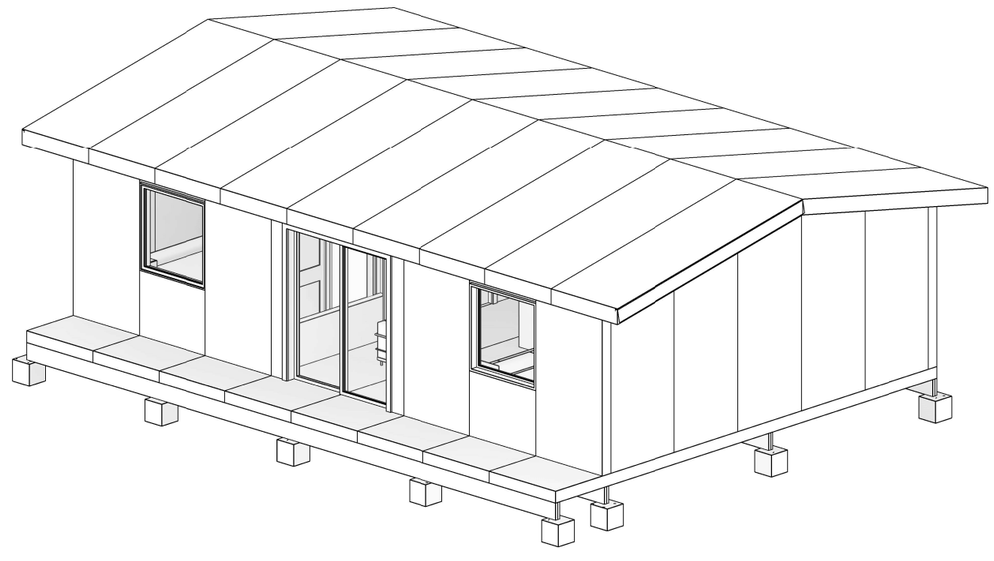

PREFLEX

ADU 20X32

PREFLEX HOMES

No.	Description	Date

Sheet List

Project number

Date Ago/29/2022

Drawn by JV

Checked by Checker

A000

Scale

19/09/2022 04:57:59 p. m.

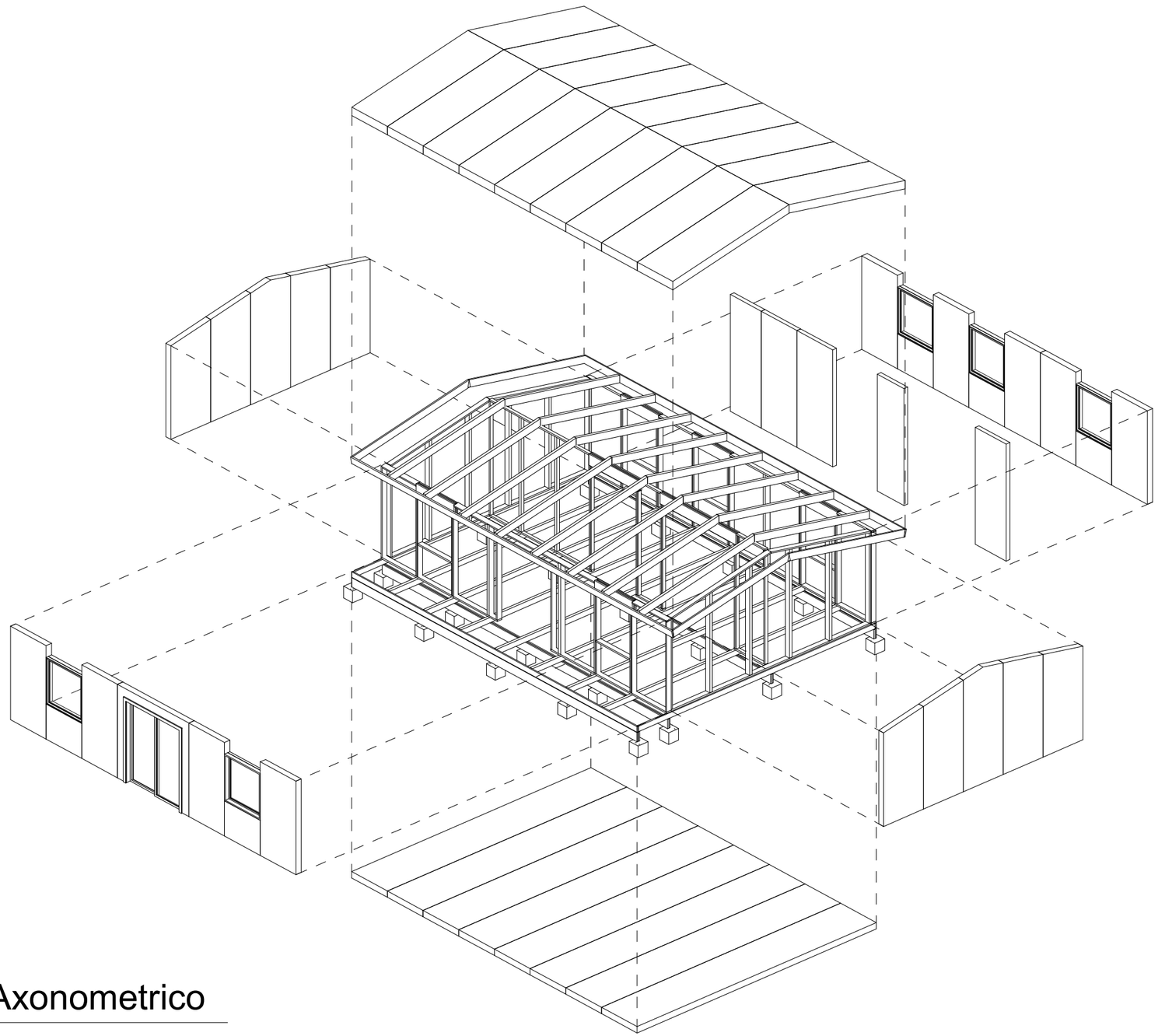

1 Axonometrico

PREFLEX

ADU 20X32

PREFLEX HOMES

No.	Description	Date

ADU 20X32 3D View

Project number	
Date	Ago/29/2022
Drawn by	OD
Checked by	Verificador
A100	
Scale	

19/09/2022 04:58:01 p. m.

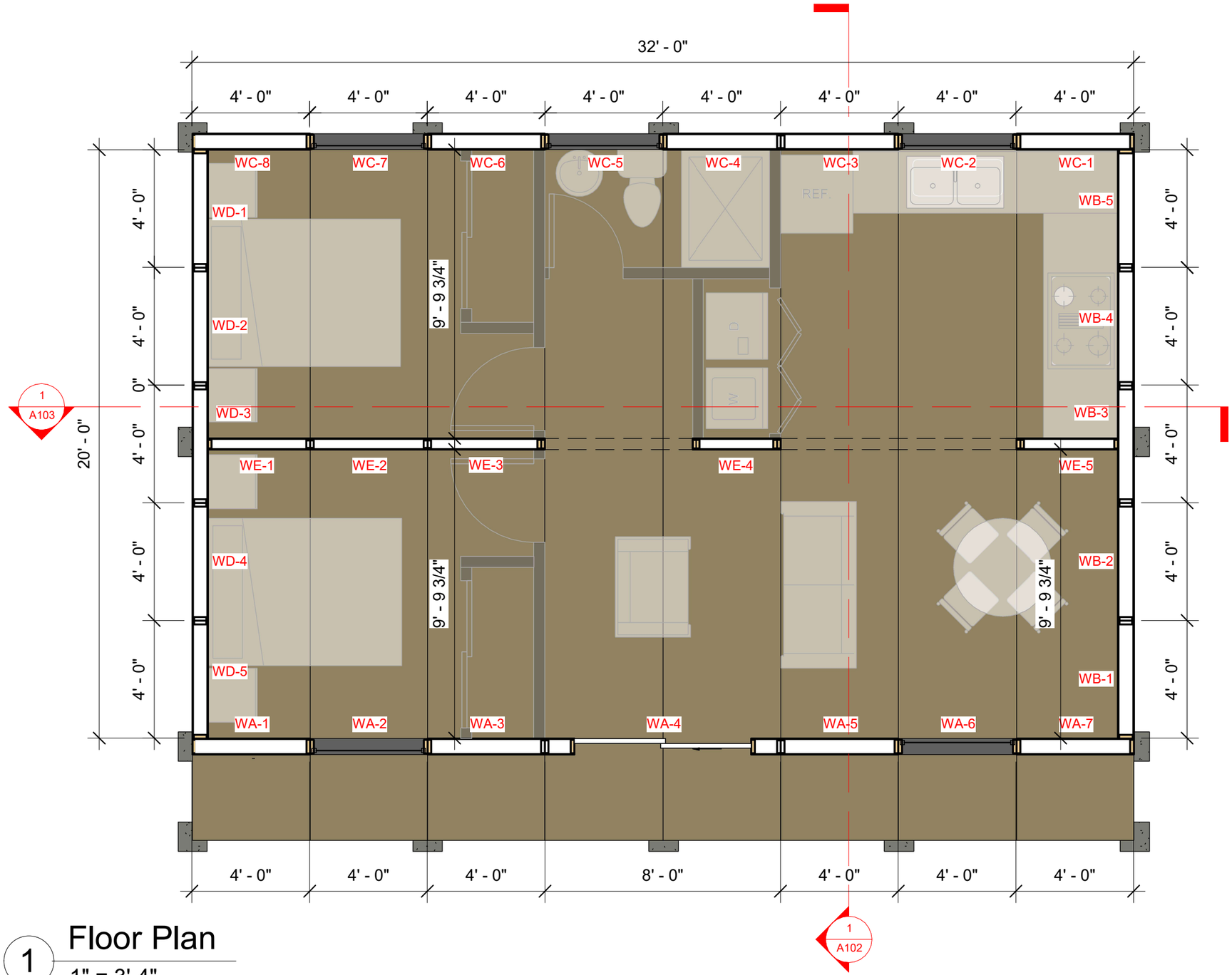

1 Floor Plan

1" = 3'-4"

PREFLEX

ADU 20X32

PREFLEX HOMES

No.	Description	Date

ADU 20X32

Project number

Date Ago/29/2022

Drawn by OD

Checked by Verificador

A101

Scale 1" = 3'-4"

19/09/2022 04:58:02 p. m.

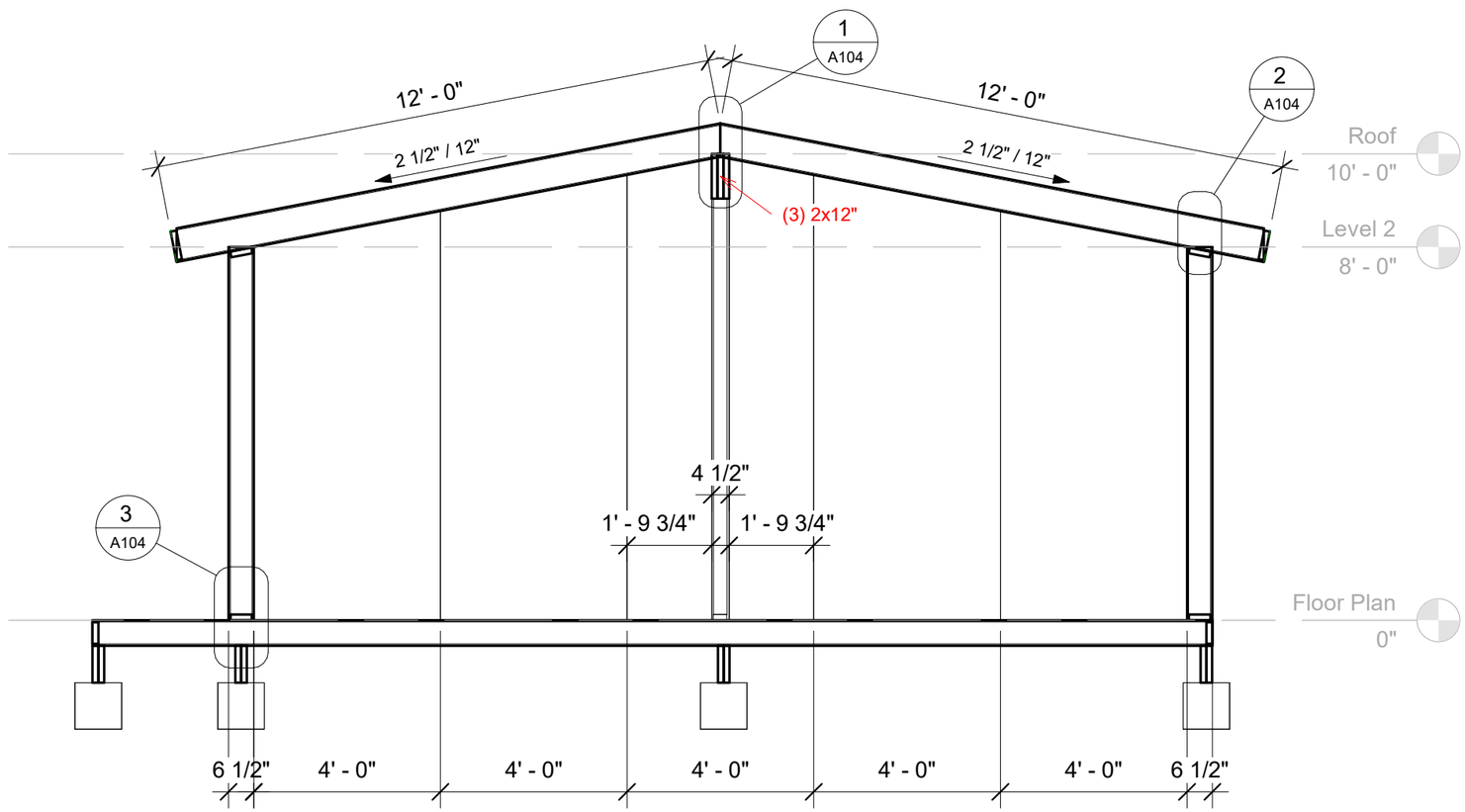

1 Section 1

1" = 2'-11"

PREFLEX

ADU 20X32

PREFLEX HOMES

No.	Description	Date

Section

Project number	
Date	Ago/29/2022
Drawn by	JV
Checked by	FT
A102	
Scale	1" = 2'-11"

19/09/2022 04:58:03 p. m.

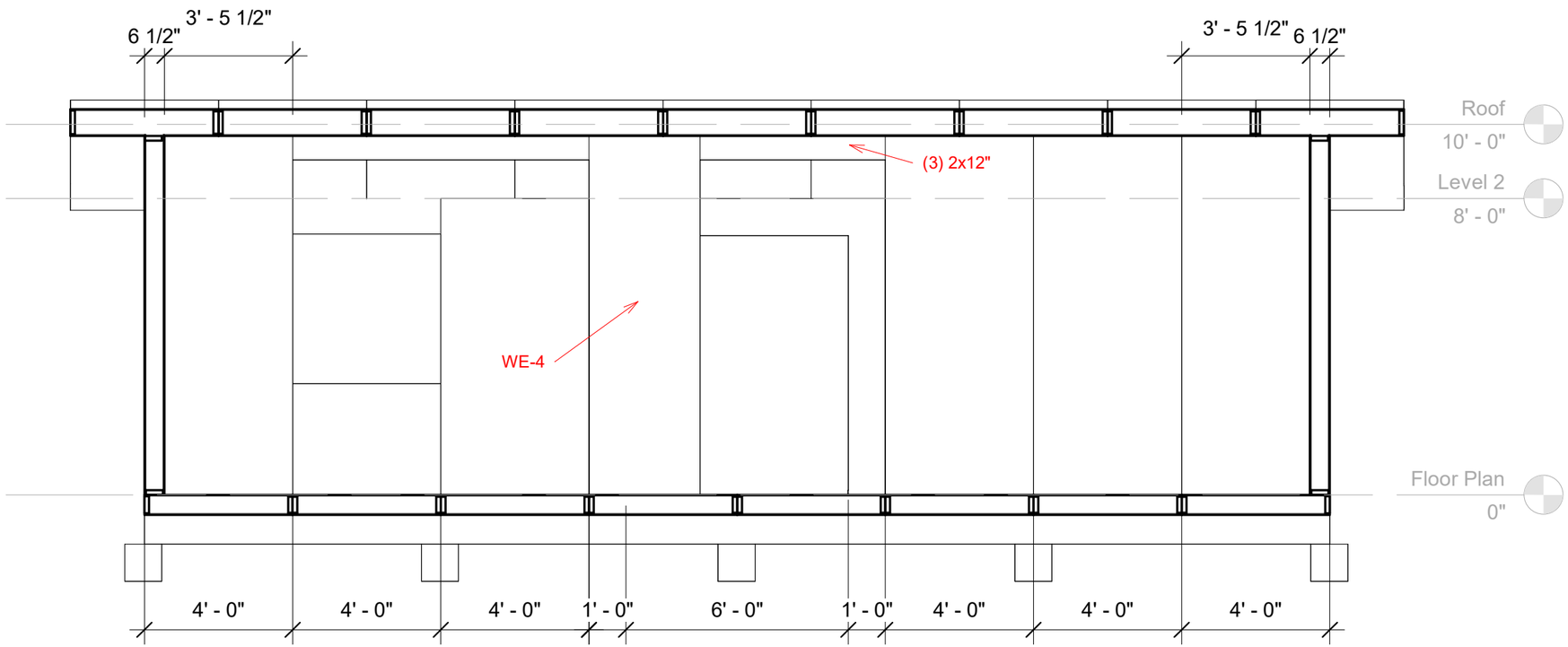

1 Section 2
1" = 3'-4"

PREFLEX

ADU 20X32

PREFLEX HOMES

No.	Description	Date

Section

Project number	
Date	Ago/29/2022
Drawn by	JV
Checked by	Checker
A103	
Scale	1" = 3'-4"

19/09/2022 04:58:04 p. m.

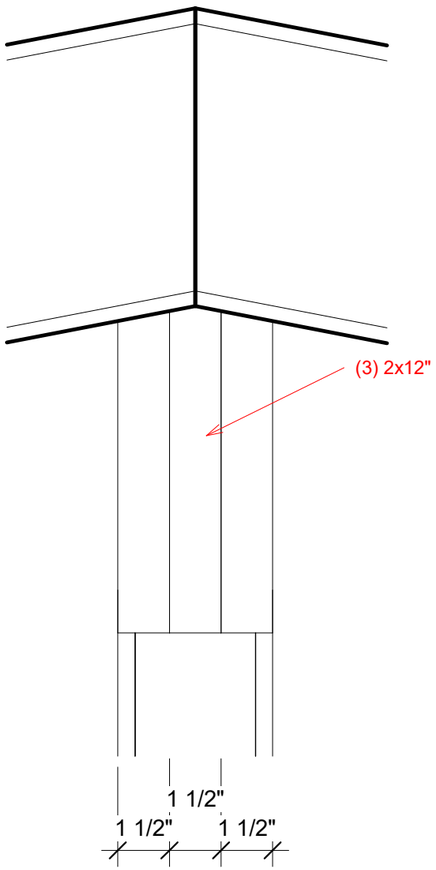

1 Callout 1
3" = 1'-0"

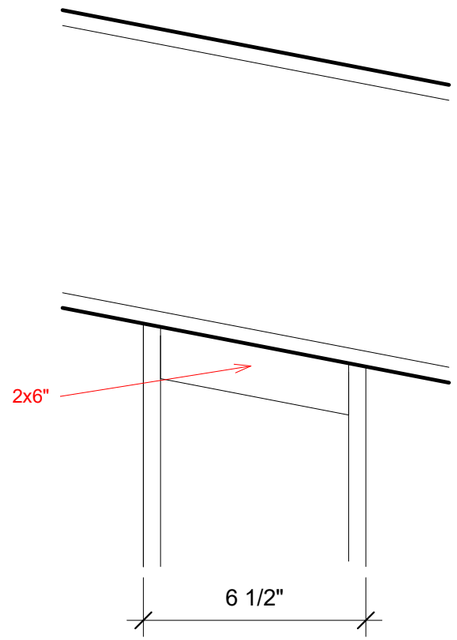

2 Callout 2
3" = 1'-0"

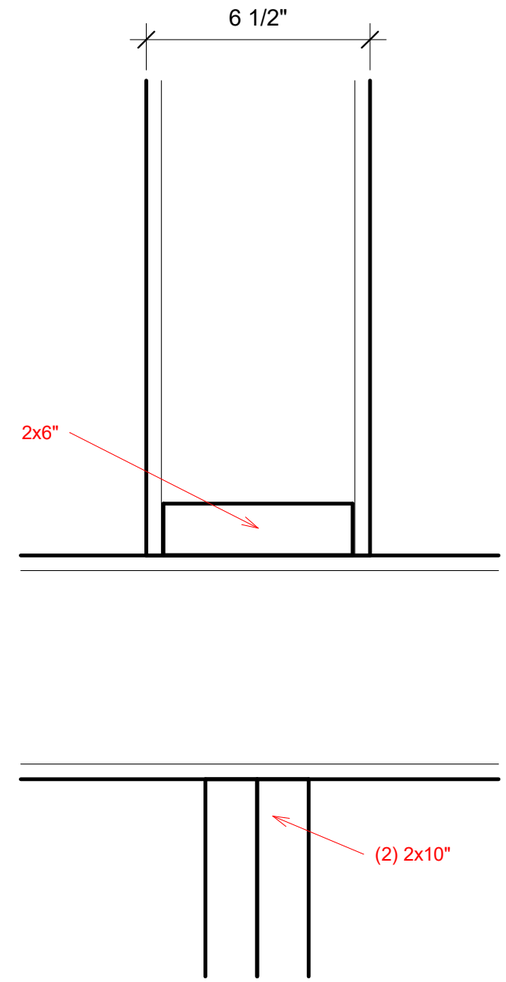

3 Callout 3
3" = 1'-0"

PREFLEX

ADU 20X32

PREFLEX HOMES

No.	Description	Date

Section

Project number	
Date	Ago/29/2022
Drawn by	OD
Checked by	Verificador
A104	
Scale	3" = 1'-0"

19/09/2022 04:58:04 p. m.

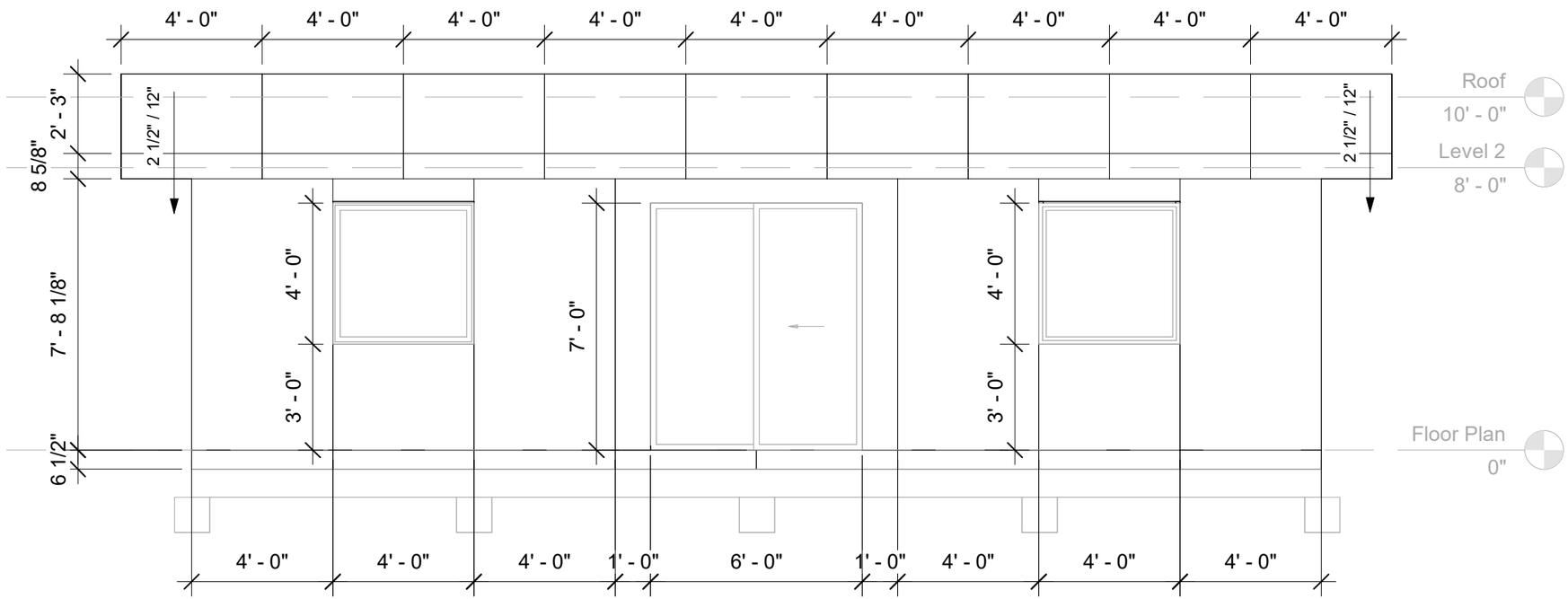

1 View "A"
1" = 3'-8"

PREFLEX

ADU 20X32

PREFLEX HOMES

No.	Description	Date

Exterior View "A"

Project number	
Date	Ago/29/2022
Drawn by	OD
Checked by	Verificador
A105	
Scale	1" = 3'-8"

19/09/2022 04:58:04 p. m.

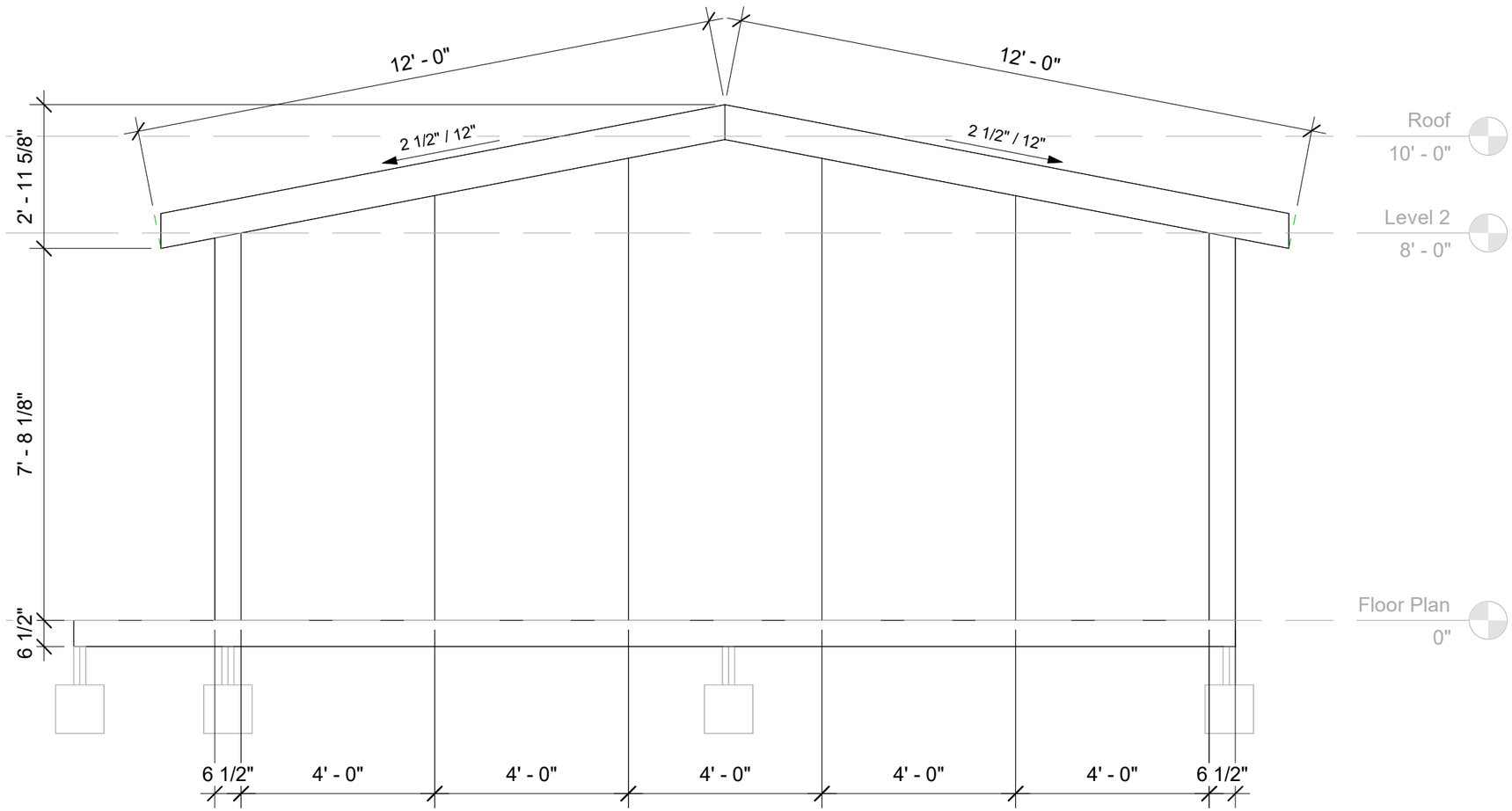

1 View "B"
1" = 2'-6"

PREFLEX

ADU 20X32

PREFLEX HOMES

No.	Description	Date

Exterior View "B"

Project number	
Date	Ago/29/2022
Drawn by	OD
Checked by	Verificador
A106	
Scale	1" = 2'-6"

19/09/2022 04:58:04 p. m.

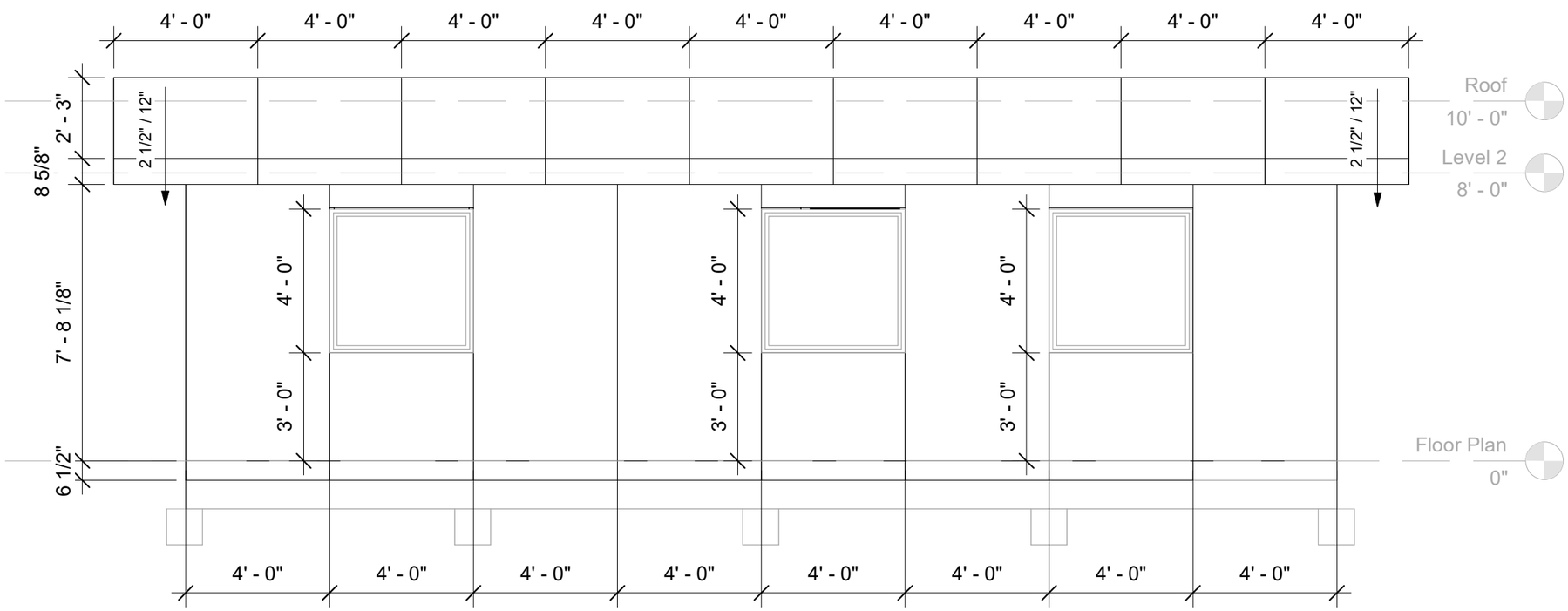

1 View "C"
1" = 3'-4"

PREFLEX

ADU 20X32

PREFLEX HOMES

No.	Description	Date

Exterior View "C"

Project number	
Date	Ago/29/2022
Drawn by	OD
Checked by	Verificador
A107	
Scale	1" = 3'-4"

19/09/2022 04:58:04 p. m.

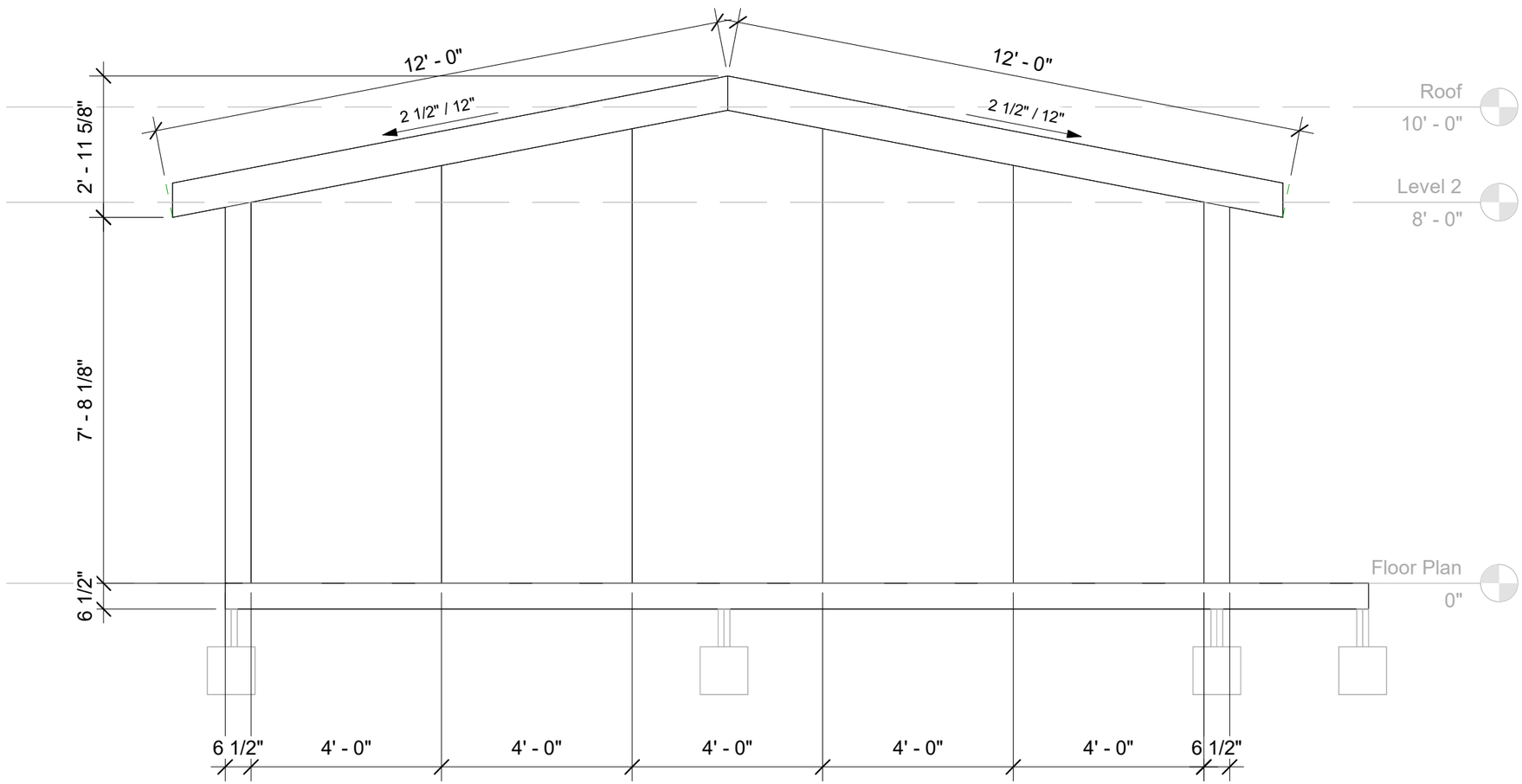

1 View "D"
1" = 2'-11"

PREFLEX

ADU 20X32

PREFLEX HOMES

No.	Description	Date

Exterior View "D"

Project number	
Date	Ago/29/2022
Drawn by	OD
Checked by	Verificador

A108

Scale 1" = 2'-11"

19/09/2022 04:58:05 p. m.

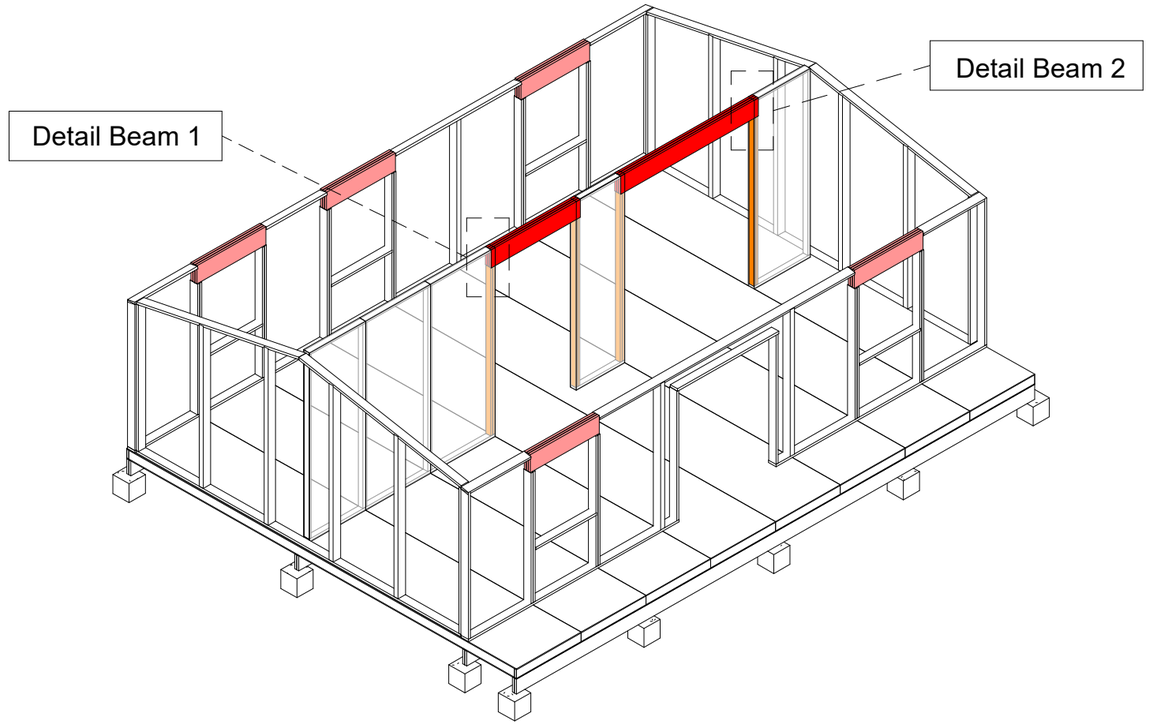

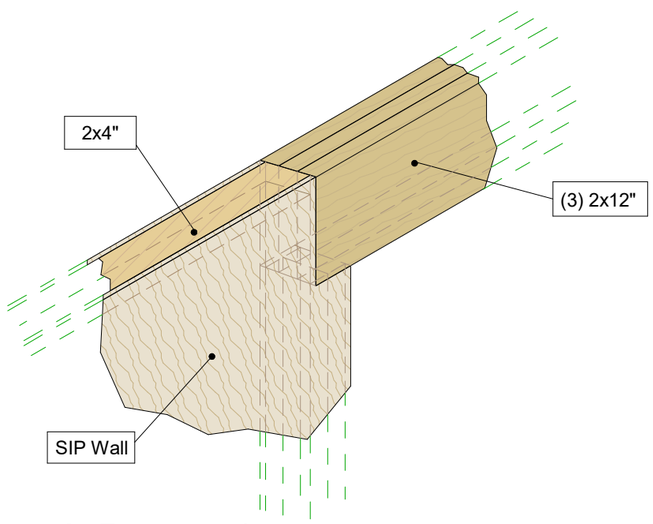

2 Detail Beam 1
N/S

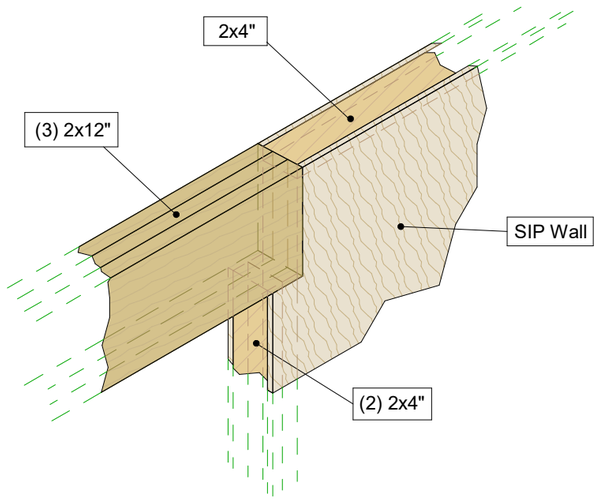

3 Detail Beam 2
N/S

PREFLEX

ADU 20X32

PREFLEX HOMES

No.	Description	Date

Beam

Project number	
Date	Ago/29/2022
Drawn by	JV / OD
Checked by	Checker
A109	
Scale	N/S

19/09/2022 04:58:05 p. m.

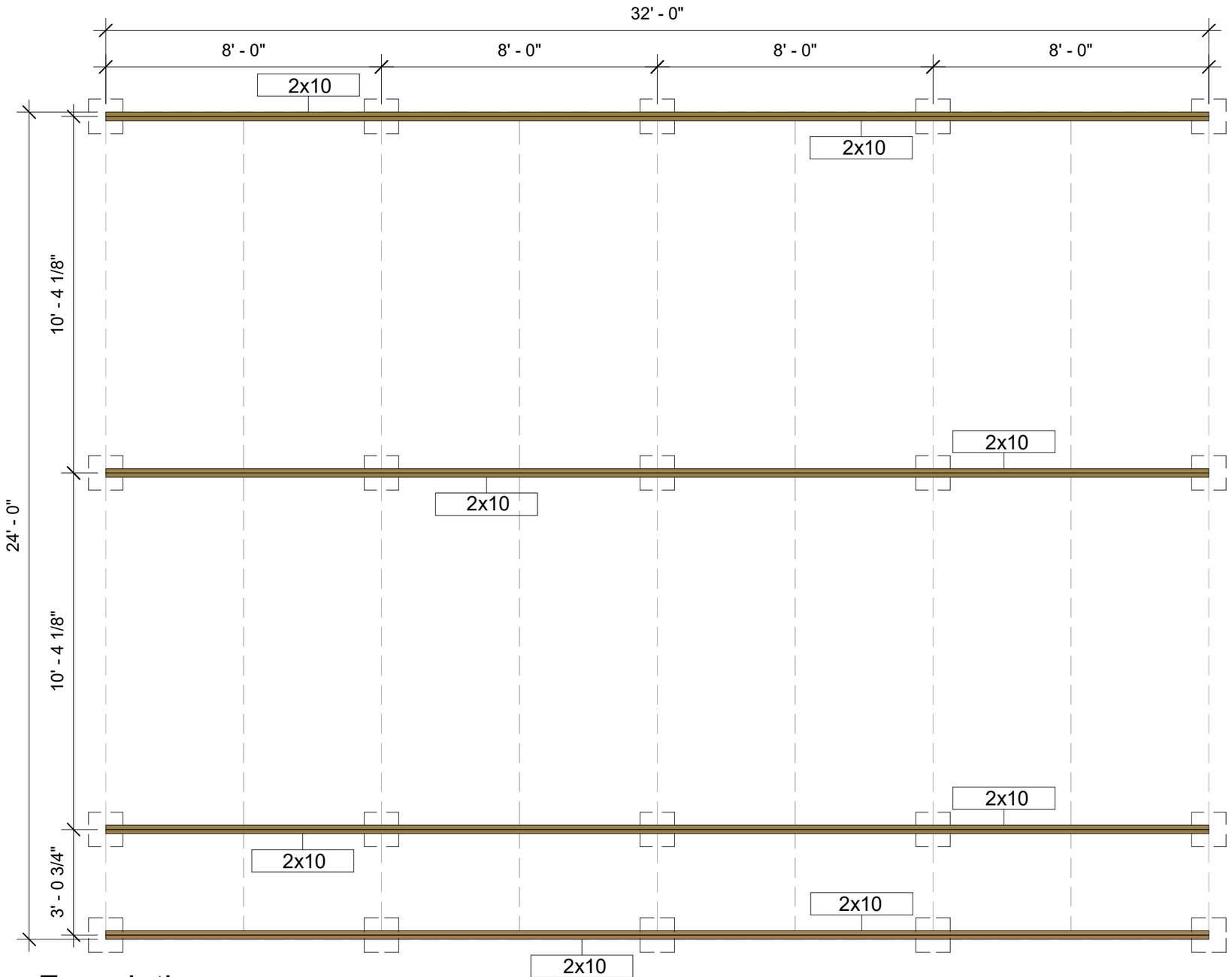

1 Foundation
1" = 2'-11"

PREFLEX

ADU 20X32

PREFLEX HOMES

No.	Description	Date

Foundation

Project number	
Date	Ago/29/2022
Drawn by	OD
Checked by	Checker
A110	
Scale	1" = 2'-11"

19/09/2022 04:58:05 p. m.

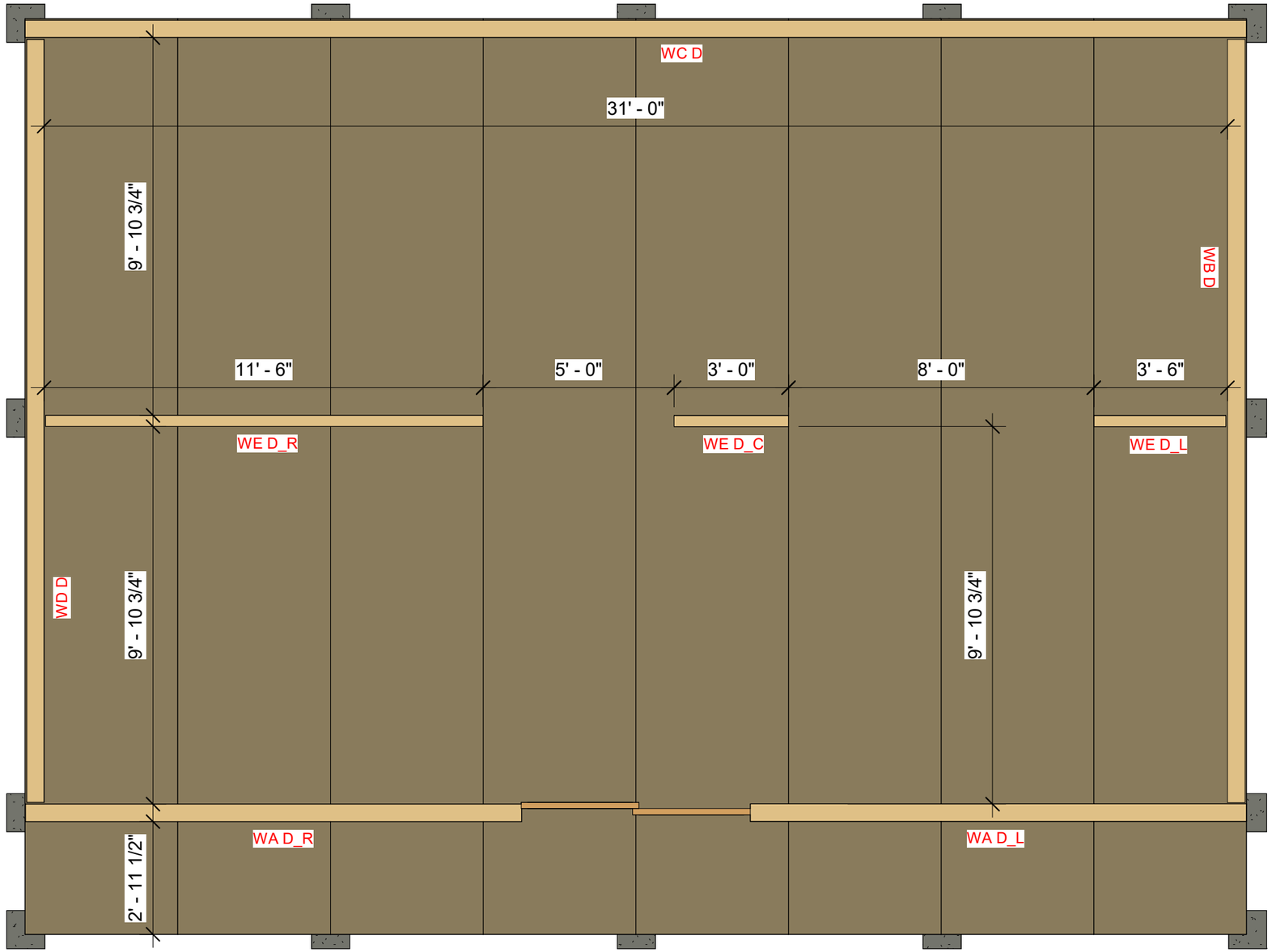

1 Bottom Plates

PREFLEX

ADU 20X32

PREFLEX HOMES

No.	Description	Date

Basement Lumbers

Project number	
Date	Ago/29/2022
Drawn by	OD
Checked by	Checker
A111	
Scale	

19/09/2022 04:58:05 p. m.

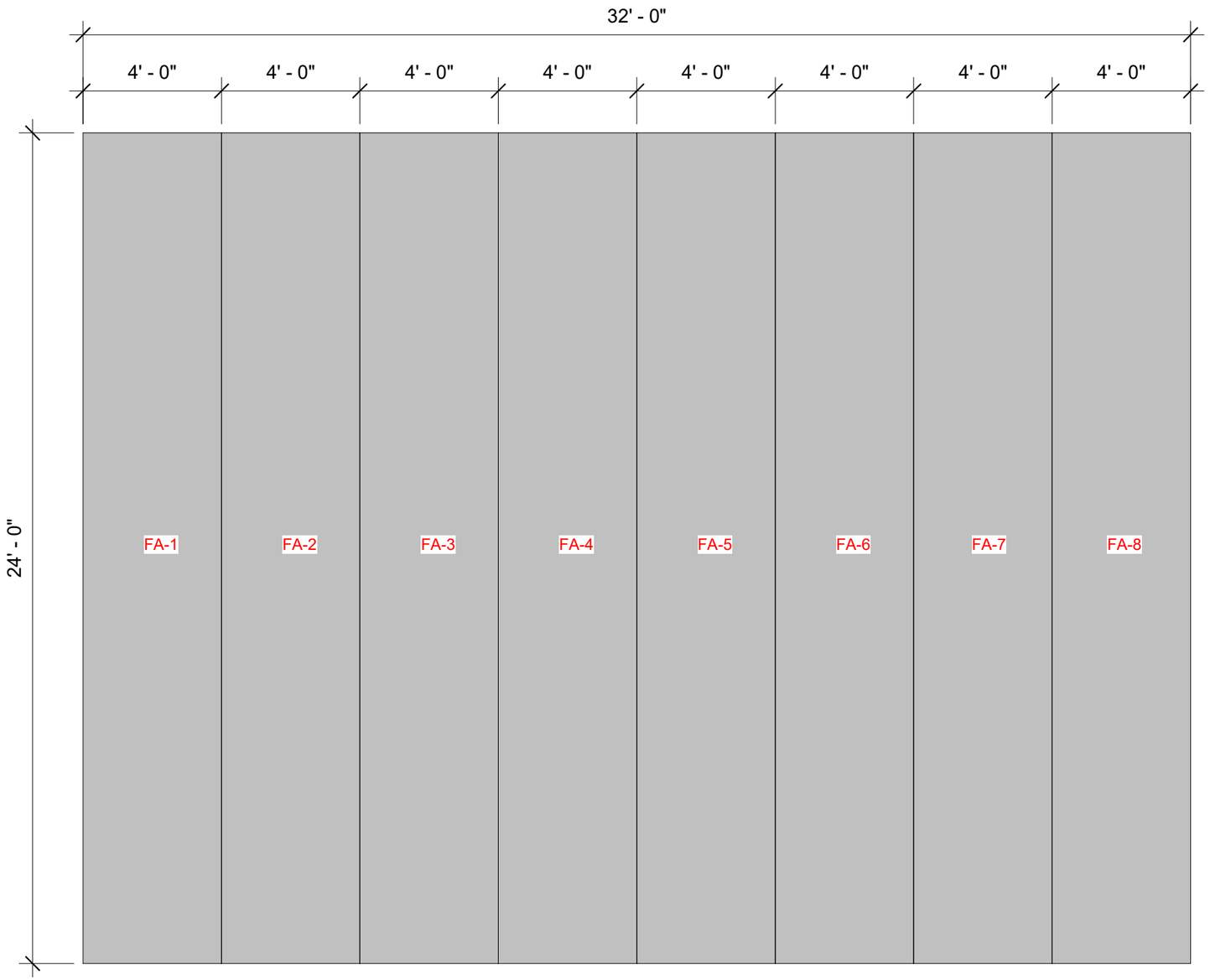

1 Panel Floor's

1" = 3'-4"

PREFLEX

ADU 20X32

PREFLEX HOMES

No.	Description	Date

Panel Floor's

Project number	
Date	Ago/29/2022
Drawn by	OD
Checked by	Checker
A112	
Scale	1" = 3'-4"

19/09/2022 04:58:05 p. m.

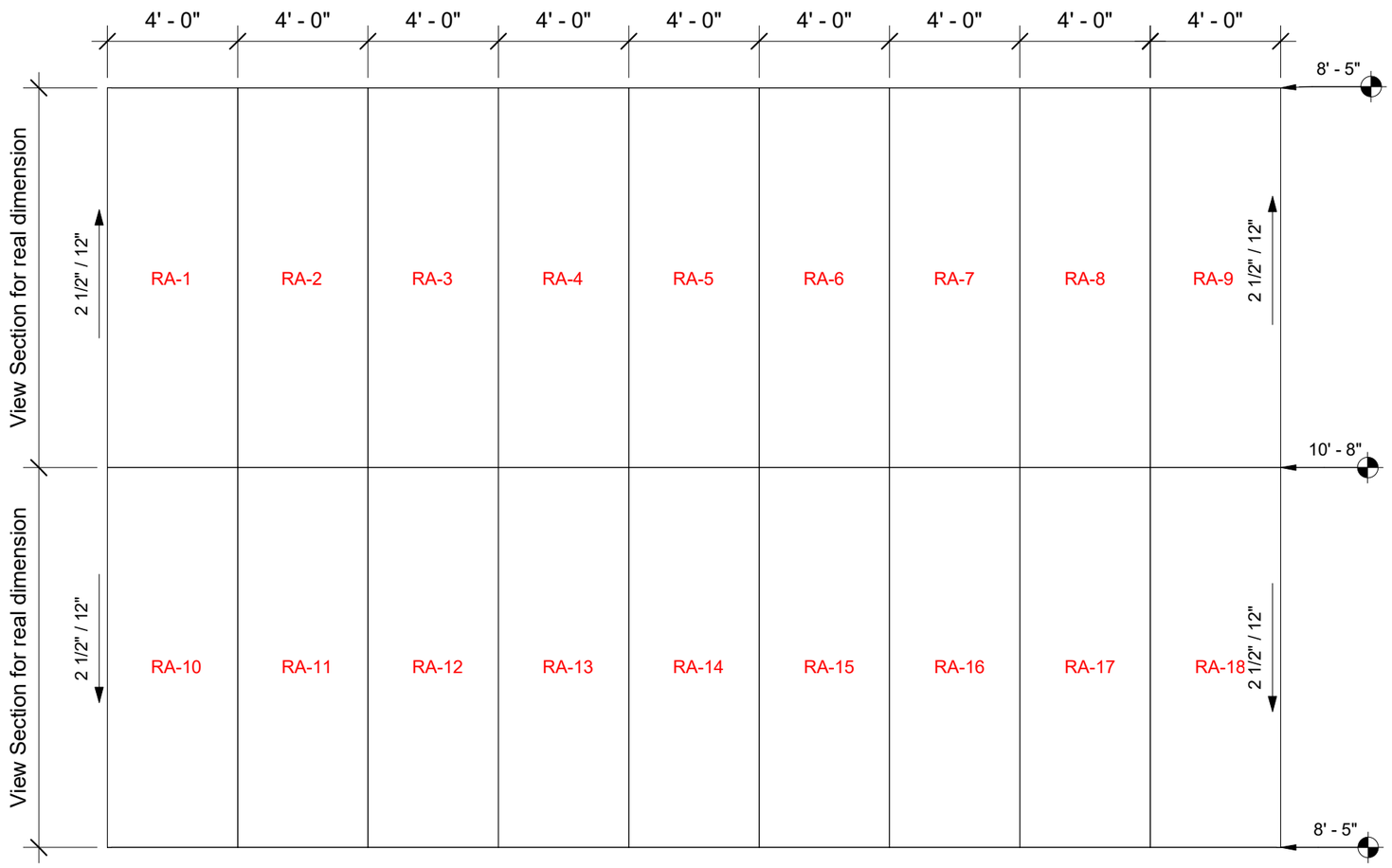

1 Panel Roof's

PREFLEX

ADU 20X32

PREFLEX HOMES

No.	Description	Date

Panel Roof's

Project number	
Date	Ago/29/2022
Drawn by	OD
Checked by	Checker
A113	
Scale	

19/09/2022 04:58:06 p. m.

Vertical Lumbers

Label	Type	Length
WA-1 L	2" x 6"	6' - 11"
WA-2 L	2" x 6"	6' - 11"
WA-2 R	2" x 6"	6' - 11"
WA-3 R	2" x 6"	6' - 11"
WA-4 L_I	2" x 6"	6' - 10 1/2"
WA-4 R_I	2" x 6"	6' - 10 1/2"
WA-5 L	2" x 6"	6' - 11"
WA-6 L	2" x 6"	6' - 11"
WA-6 R	2" x 6"	6' - 11"
WA-7 L	2" x 6"	7' - 9"
WA-7 R	2" x 6"	6' - 11"
WA-R	2" x 6"	7' - 9"
WB-1 R	2" x 6"	7' - 9"
WB-5 L	2" x 6"	7' - 9"
WC-1 L	2" x 6"	6' - 11"
WC-1 R	2" x 6"	7' - 9"
WC-2 L	2" x 6"	6' - 11"
WC-2 R	2" x 6"	6' - 11"
WC-3 R	2" x 6"	6' - 11"
WC-4 L	2" x 6"	6' - 11"
WC-5 L	2" x 6"	6' - 11"
WC-5 R	2" x 6"	6' - 11"
WC-6 L	2" x 6"	6' - 11"
WC-6 R	2" x 6"	6' - 11"
WC-7 L	2" x 6"	6' - 11"
WC-7 R	2" x 6"	6' - 11"
WC-8 L	2" x 6"	7' - 9"
WC-8 R	2" x 6"	6' - 11"
WD-1 R	2" x 6"	7' - 9"
WD-5 L	2" x 6"	7' - 9"
WE-1 R	2" x 4"	9' - 9"
WE-3 L_E	2" x 4"	8' - 11"
WE-3 L_I	2" x 4"	8' - 11"
WE-4 L_E	2" x 4"	8' - 11"
WE-4 L_I	2" x 4"	8' - 11"
WE-4 R_E	2" x 4"	8' - 11"
WE-4 R_I	2" x 4"	8' - 11"
WE-5 L	2" x 4"	9' - 9"
WE-5 R_E	2" x 4"	8' - 11"
WE-5 R_I	2" x 4"	8' - 11"
Grand total: 40		304' - 11 1/2"

L= Left

E= Exterior

R= Right

I= Inside

Horizontal Lumbers

Label	Type	Length
DA A1	2" x 10"	32' - 0"
DA A2	2" x 10"	32' - 0"
DA A_E1	2" x 10"	32' - 0"
DA A_E2	2" x 10"	32' - 0"
DA C1	2" x 10"	32' - 0"
DA C2	2" x 10"	32' - 0"
DA E1	2" x 10"	32' - 0"
DA E2	2" x 10"	32' - 0"
FA A	2" x 6"	32' - 0"
FA B	2" x 6"	23' - 9"
FA C	2" x 6"	32' - 0"
FA D	2" x 6"	23' - 9"
RA A	2" x 8"	36' - 0"
RA C	2" x 8"	36' - 0"
RA-1 L	2" x 8"	11' - 10 1/2"
RA-9 R	2" x 8"	11' - 10 1/2"
RA-10 L	2" x 8"	11' - 10 1/2"
RA-18 R	2" x 8"	11' - 10 1/2"
WA D_L	2" x 6"	13' - 0"
WA D_R	2" x 6"	13' - 0"
WA U_C	2" x 6"	15' - 9"
WA U_L	2" x 6"	3' - 10 1/2"
WA U_R	2" x 6"	3' - 10 1/2"
WA-2 D_I	2" x 6"	3' - 9"
WA-2 U1	2" x 12"	4' - 3"
WA-2 U2	2" x 12"	4' - 3"
WA-2 U3	2" x 12"	4' - 3"
WA-4 U_I	2" x 6"	6' - 3"
WA-6 D_I	2" x 6"	3' - 9"
WA-6 U1	2" x 12"	4' - 3"
WA-6 U2	2" x 12"	4' - 3"
WA-6 U3	2" x 12"	4' - 3"
WB D	2" x 6"	20' - 0"
WB U_L	2" x 6"	10' - 2 1/2"
WB U_R	2" x 6"	10' - 2 1/2"
WC D	2" x 6"	32' - 0"
WC U_L_E	2" x 6"	3' - 10 1/2"
WC U_L_I	2" x 6"	3' - 9"
WC U_R_E	2" x 6"	3' - 10 1/2"
WC U_R_I	2" x 6"	7' - 9"
WC-2 D_I	2" x 6"	3' - 9"
WC-2 U1	2" x 12"	4' - 3"
WC-2 U2	2" x 12"	4' - 3"
WC-3 U3	2" x 12"	4' - 3"
WC-5 D_I	2" x 6"	3' - 9"

Horizontal Lumbers

Label	Type	Length
WC-5 U1	2" x 12"	4' - 3"
WC-5 U2	2" x 12"	4' - 3"
WC-5 U3	2" x 12"	4' - 3"
WC-7 D_I	2" x 6"	3' - 9"
WC-7 U1	2" x 12"	4' - 3"
WC-7 U2	2" x 12"	4' - 3"
WC-7 U3	2" x 12"	4' - 3"
WD D	2" x 6"	20' - 0"
WD U_L	2" x 6"	10' - 2 1/2"
WD U_R	2" x 6"	10' - 2 1/2"
WE D_C	2" x 4"	3' - 0"
WE D_L	2" x 4"	3' - 5 1/2"
WE D_R	2" x 4"	11' - 5 1/2"
WE L_U1	2" x 12"	5' - 6"
WE L_U2	2" x 12"	5' - 6"
WE L_U3	2" x 12"	5' - 6"
WE R_U1	2" x 12"	8' - 6"
WE R_U2	2" x 12"	8' - 6"
WE R_U3	2" x 12"	8' - 6"
WE U_C	2" x 4"	2' - 6"
WE U_L	2" x 4"	11' - 2 1/2"
WE U_R	2" x 4"	3' - 2 1/2"
Grand total: 67		834' - 1"

DA= Foundation

U= Up

D= Down

The third letter indicates in which axis the Lumber is located, this only applies to the roof, floor and foundation.

Floor Block Spline

Label	Type	Length
FA-1	Floor_SIP_6" BS	18' - 11"
FA-2	Floor_SIP_6" BS	18' - 11"
FA-3	Floor_SIP_6" BS	18' - 11"
FA-4	Floor_SIP_6" BS	18' - 11"
FA-5	Floor_SIP_6" BS	18' - 11"
FA-6	Floor_SIP_6" BS	18' - 11"
FA-7	Floor_SIP_6" BS	18' - 11"
Grand total: 7		

Roof Schedule

Type	Area	Thickness
Roof_SIP_8"	854.44 SF	8 1/2"
Grand total: 18	854.44 SF	

Wall Schedule

Type	Area	Width
WALL_SIP_4"	179.17 SF	4 1/2"
WALL_SIP_6"	728.66 SF	6 1/2"
Grand total: 30	907.83 SF	

Floor Schedule

Type	Area	Thickness
Floor_SIP_6"	768 SF	6 1/2"
Grand total: 8	768 SF	

Wall Block Spline

Label	Type	Length
WA-3 L	Block Spline 6"	7' - 9"
WA-5 R	Block Spline 6"	7' - 9"
WB-1 L	Block Spline 6"	8' - 7"
WB-2 L	Block Spline 6"	9' - 4"
WB-3 L	Block Spline 6"	9' - 4"
WB-4 L	Block Spline 6"	8' - 7"
WC-3 L	Block Spline 6"	7' - 9"
WD-1 L	Block Spline 6"	8' - 7"
WD-2 L	Block Spline 6"	9' - 4"
WD-3 L	Block Spline 6"	9' - 4"
WD-4 L	Block Spline 6"	8' - 7"
Grand total: 11		94' - 11"

Roof Lumbers

Label	Type	Length
RA A	2" x 8"	36' - 0"
RA C	2" x 8"	36' - 0"
RA-1 L	2" x 8"	11' - 10 1/2"
RA-9 R	2" x 8"	11' - 10 1/2"
RA-10 L	2" x 8"	11' - 10 1/2"
RA-18 R	2" x 8"	11' - 10 1/2"
Grand total: 6		119' - 6"

PREFLEX

ADU 20X32

PREFLEX HOMES

No.	Description	Date

Quantities

Project number	
Date	Ago/29/2022
Drawn by	JV
Checked by	GG
A200	
Scale	

19/09/2022 04:58:06 p. m.

Top Plate

Label	Type	Length
WB U_L	2" x 6"	10' - 2 1/2"
WB U_R	2" x 6"	10' - 2 1/2"
WD U_R	2" x 6"	10' - 2 1/2"
WD U_L	2" x 6"	10' - 2 1/2"
WA U_C	2" x 6"	15' - 9"
WC U_R_I	2" x 6"	7' - 9"
Grand total: 6		64' - 3"

Roof Block Spline

Label	Type	Length
RA-1 R	Roof_SIP_8" BS	11' - 9"
RA-2	Roof_SIP_8" BS	11' - 9"
RA-3 R	Roof_SIP_8" BS	11' - 9"
RA-4 R	Roof_SIP_8" BS	11' - 9"
RA-5 R	Roof_SIP_8" BS	11' - 9"
RA-6 R	Roof_SIP_8" BS	11' - 9"
RA-7 R	Roof_SIP_8" BS	11' - 9"
RA-8 R	Roof_SIP_8" BS	11' - 9"
RA-10 R	Roof_SIP_8" BS	11' - 9"
RA-11 R	Roof_SIP_8" BS	11' - 9"
RA-12 R	Roof_SIP_8" BS	11' - 9"
RA-13 R	Roof_SIP_8" BS	11' - 9"
RA-14 R	Roof_SIP_8" BS	11' - 9"
RA-15 R	Roof_SIP_8" BS	11' - 9"
RA-16 R	Roof_SIP_8" BS	11' - 9"
RA-17 R	Roof_SIP_8" BS	11' - 9"
Grand total: 16		188' - 0"

L= Left
E= Exterior
R= Right
I= Inside
U= Up
D= Down

The third letter indicates in which axis the Lumber is located, this only applies to the roof, floor and foundation.

Base Lumbers

Label	Type	Length
WA D_L	2" x 6"	13' - 0"
WA D_R	2" x 6"	13' - 0"
WA-2 D_I	2" x 6"	3' - 9"
WA-6 D_I	2" x 6"	3' - 9"
WB D	2" x 6"	20' - 0"
WC D	2" x 6"	32' - 0"
WC-2 D_I	2" x 6"	3' - 9"
WC-5 D_I	2" x 6"	3' - 9"
WC-7 D_I	2" x 6"	3' - 9"
WD D	2" x 6"	20' - 0"
WE D_C	2" x 4"	3' - 0"
WE D_L	2" x 4"	3' - 5 1/2"
WE D_R	2" x 4"	11' - 5 1/2"
Grand total: 13		134' - 8"

R.O. Doors and Windows

Label	Type	Length
WA U_L	2" x 6"	3' - 10 1/2"
WC U_L_E	2" x 6"	3' - 10 1/2"
WA-6 D_I	2" x 6"	3' - 9"
WC-2 D_I	2" x 6"	3' - 9"
WA-4 U_I	2" x 6"	6' - 3"
WC-5 D_I	2" x 6"	3' - 9"
WC-7 D_I	2" x 6"	3' - 9"
WA-2 D_I	2" x 6"	3' - 9"
WA U_R	2" x 6"	3' - 10 1/2"
WC U_L_I	2" x 6"	3' - 9"
WC U_R_E	2" x 6"	3' - 10 1/2"
Grand total: 11		44' - 3"

Floor Lumbers

Label	Type	Length
FA A	2" x 6"	32' - 0"
FA B	2" x 6"	23' - 9"
FA C	2" x 6"	32' - 0"
FA D	2" x 6"	23' - 9"
Grand total: 4		111' - 6"

Window Schedule

Type	Width	Height
4' x 4'	4' - 0"	4' - 0"
Grand total: 5		

Door Schedule

Type	Width	Height
1800 x 2100mm	6' - 0"	7' - 0"
Grand total: 1		

PREFLEX

ADU 20X32

PREFLEX HOMES

No.	Description	Date

Quantities

Project number	
Date	Ago/29/2022
Drawn by	OD
Checked by	Checker

A200.1

Scale

19/09/2022 04:58:07 p. m.

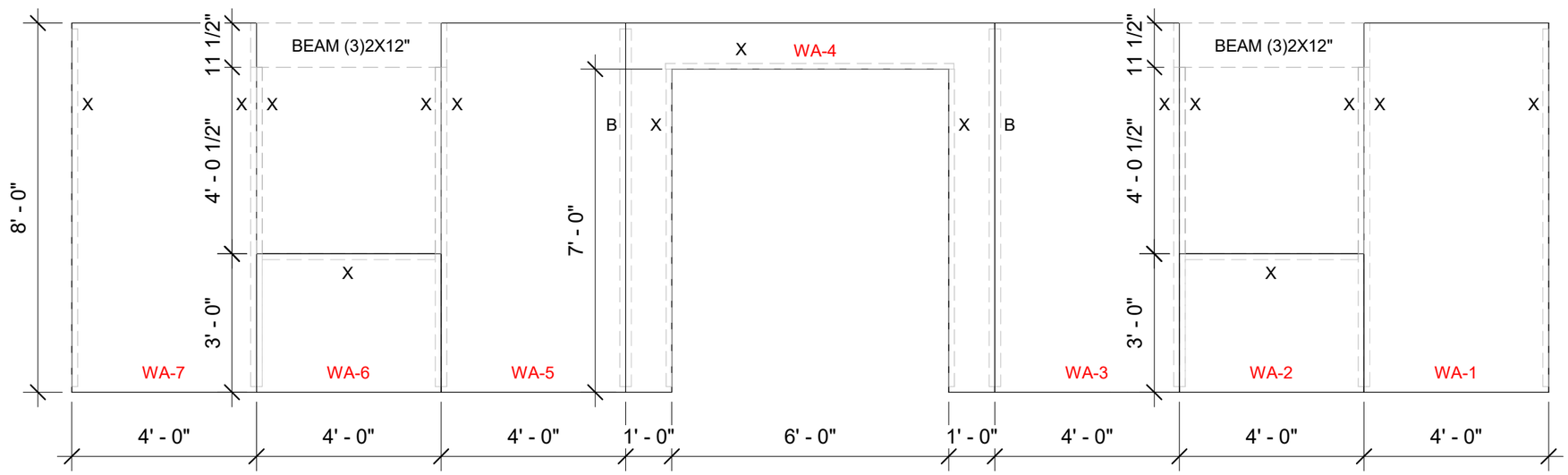

1 WA Wall

3/8" = 1'-0"

PREFLEX

ADU 20X32

PREFLEX HOMES

No.	Description	Date

Inside View "A"

Project number	
Date	Ago/29/2022
Drawn by	OD
Checked by	Checker
A201	
Scale	3/8" = 1'-0"

19/09/2022 04:58:07 p. m.

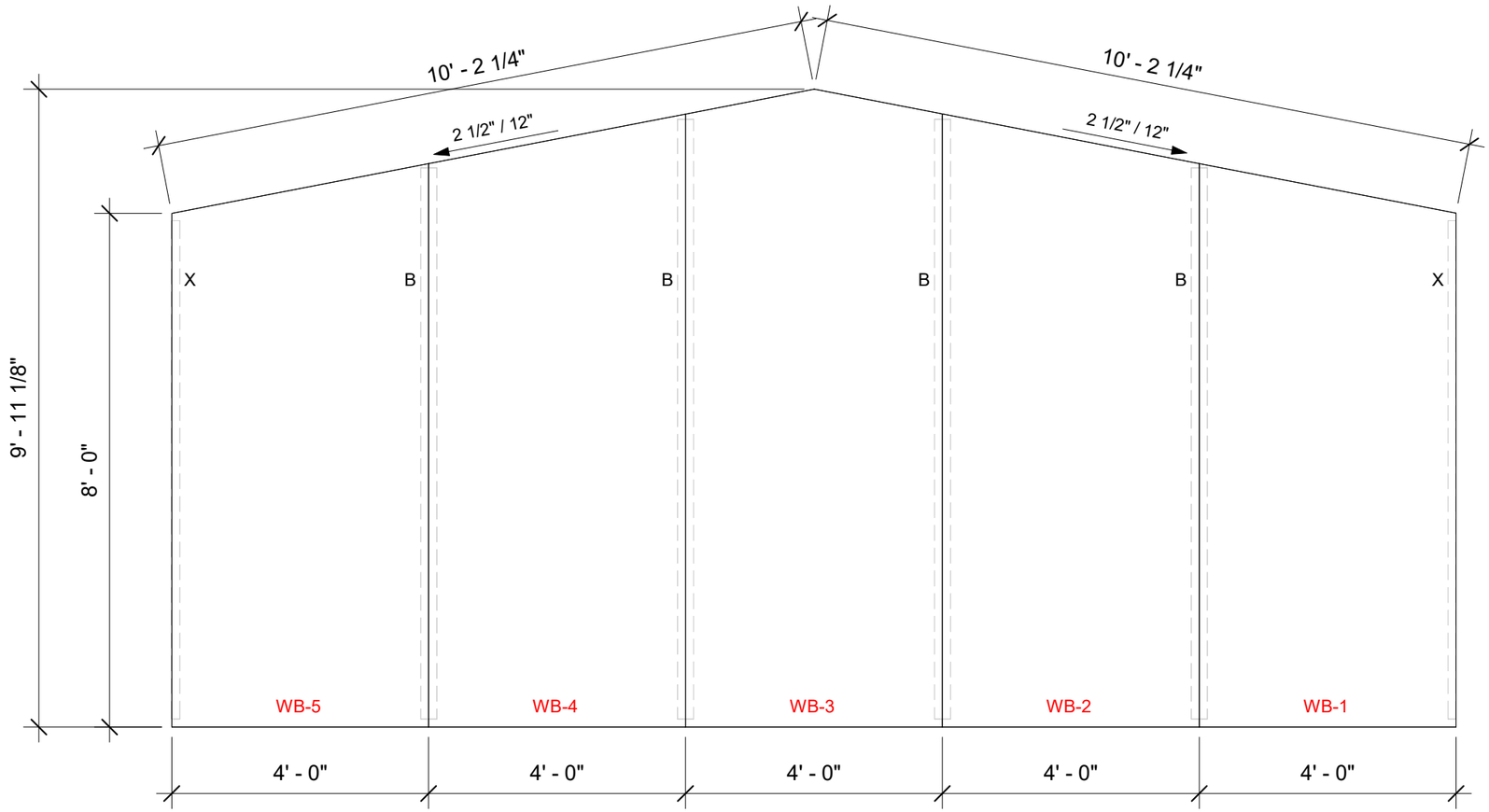

1 WB Wall

1/2" = 1'-0"

PREFLEX

ADU 20X32

PREFLEX HOMES

No.	Description	Date

Inside View "B"

Project number	
Date	Ago/29/2022
Drawn by	OD
Checked by	Checker
A202	
Scale	1/2" = 1'-0"

19/09/2022 04:58:07 p. m.

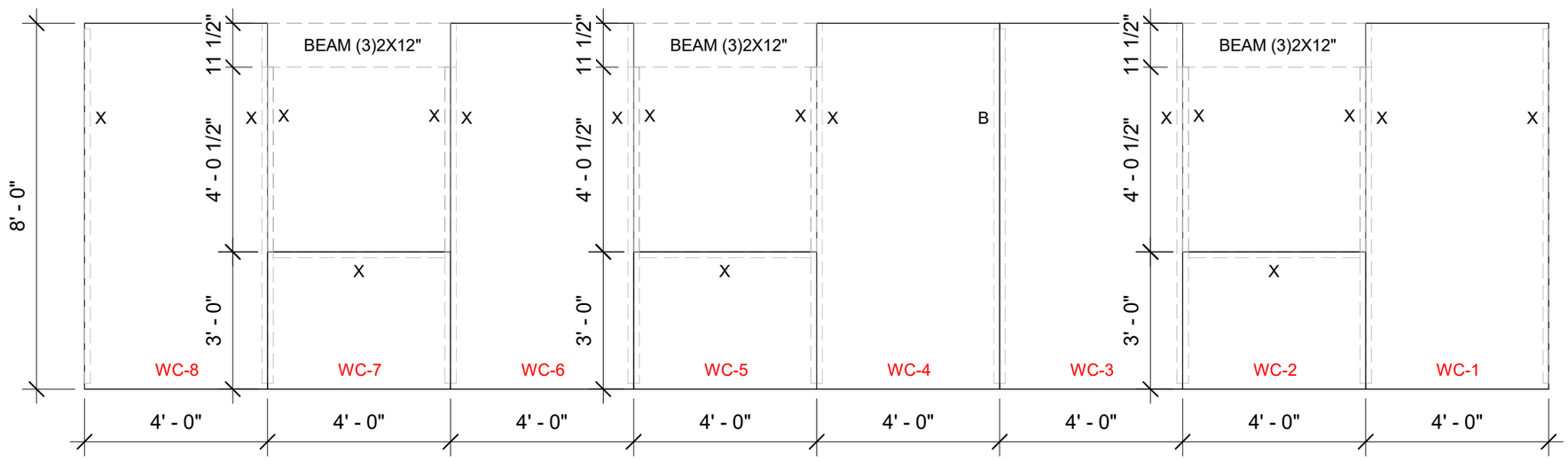

1 WC Wall
3/8" = 1'-0"

PREFLEX

ADU 20X32

PREFLEX HOMES

No.	Description	Date

Inside View "C"

Project number	
Date	Ago/29/2022
Drawn by	OD
Checked by	Checker
A203	
Scale	3/8" = 1'-0"

19/09/2022 04:58:08 p. m.

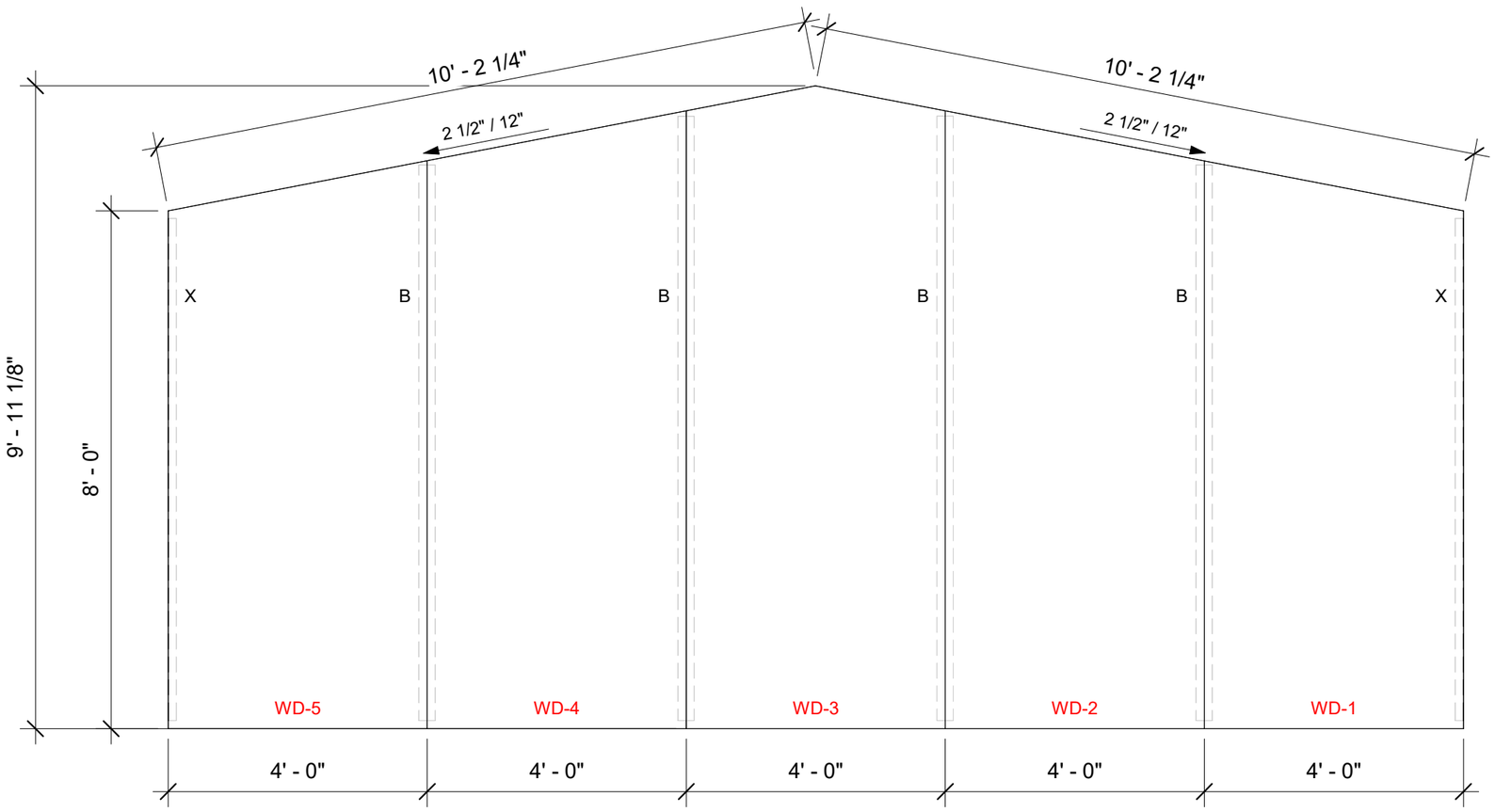

1 WD Wall
1/2" = 1'-0"

PREFLEX

ADU 20X32

PREFLEX HOMES

No.	Description	Date

Inside View "D"

Project number	
Date	Ago/29/2022
Drawn by	OD
Checked by	Checker
A204	
Scale	1/2" = 1'-0"

19/09/2022 04:58:08 p. m.

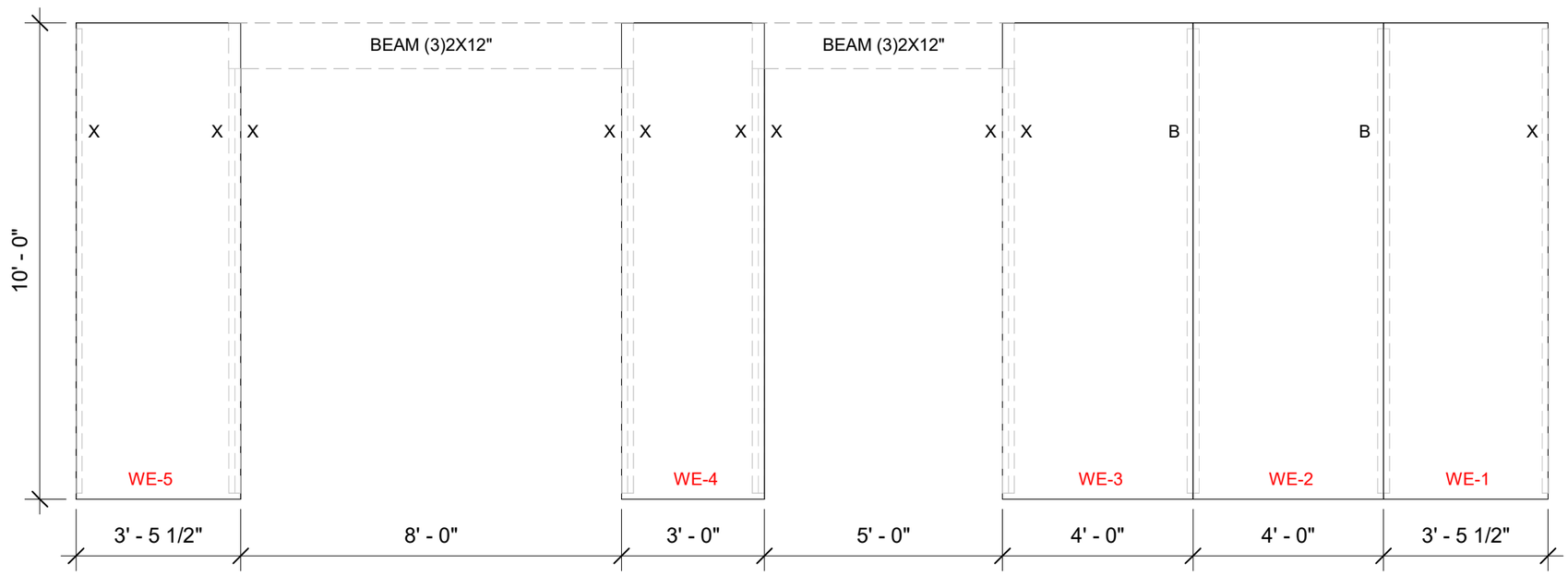

1 WE Wall
3/8" = 1'-0"

View from "C" Wall

PREFLEX

ADU 20X32

PREFLEX HOMES

No.	Description	Date

Inside View "E"

Project number	
Date	Ago/29/2022
Drawn by	OD
Checked by	Verificador
A205	
Scale	3/8" = 1'-0"

19/09/2022 04:58:08 p. m.

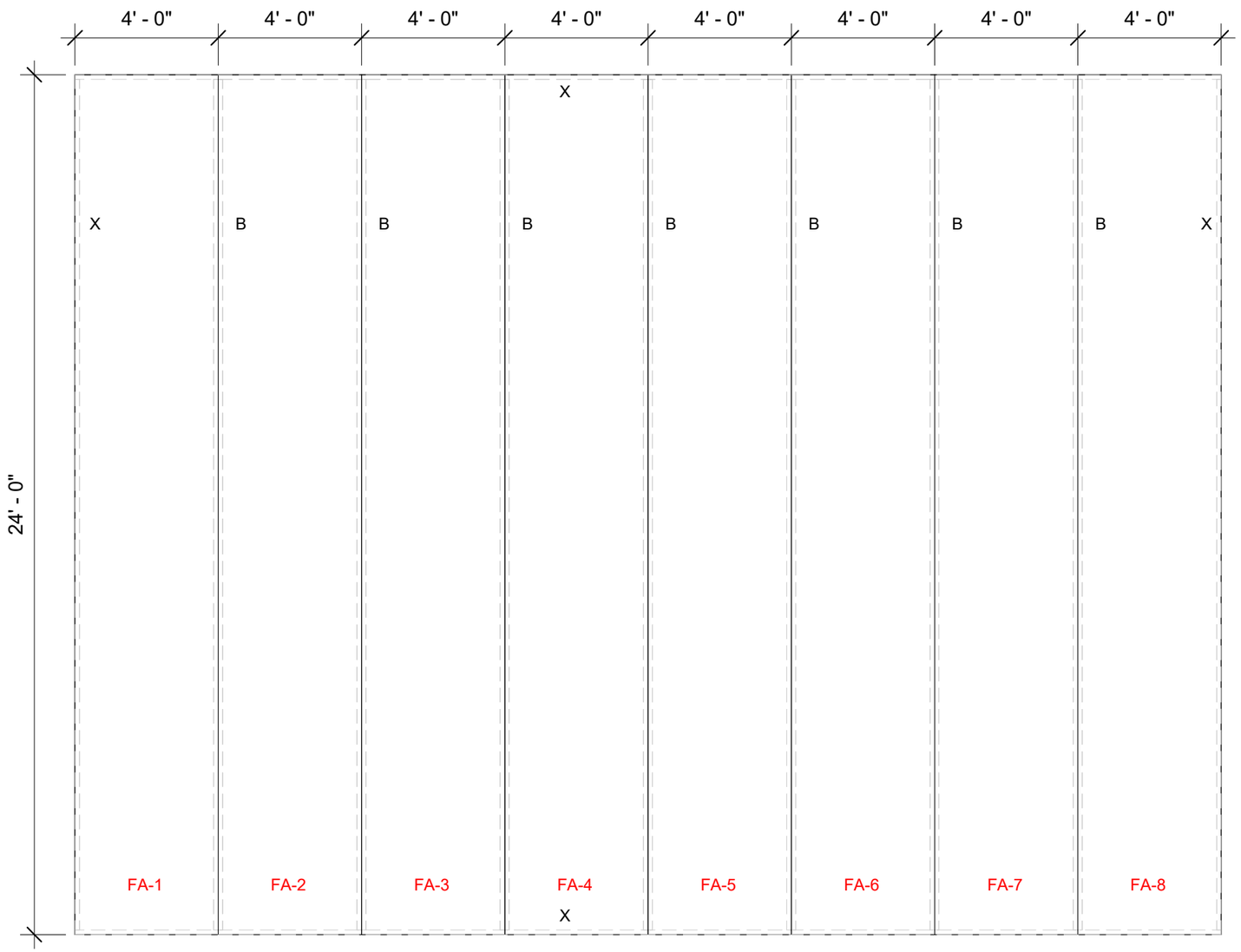

1 Floor

1" = 3'-4"

PREFLEX

ADU 20X32

PREFLEX HOMES

No.	Description	Date

Floor View

Project number	
Date	Ago/29/2022
Drawn by	OD
Checked by	Verificador

A206

Scale	1" = 3'-4"

19/09/2022 04:58:08 p. m.

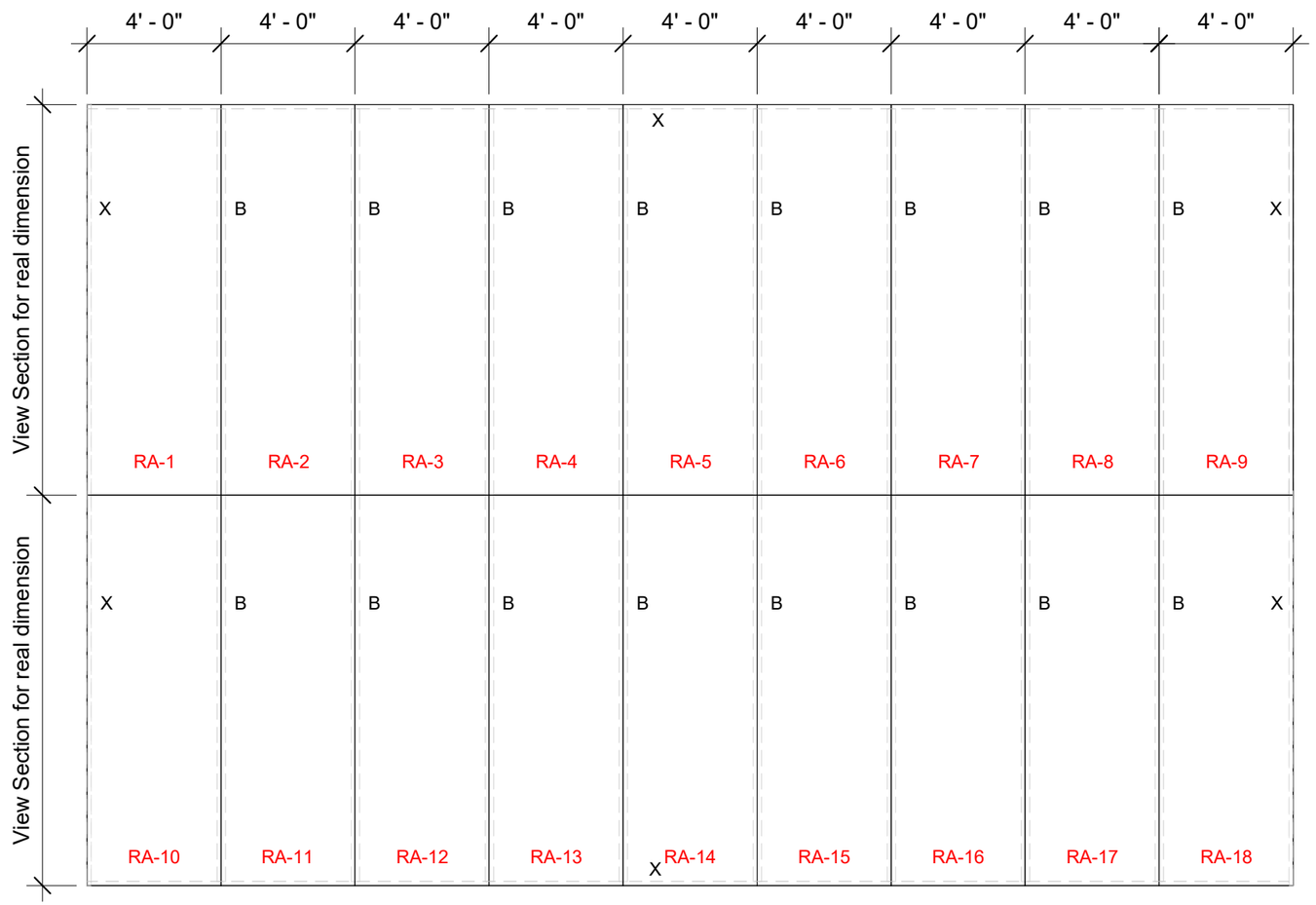

1 Roof

1/4" = 1'-0"

PREFLEX

ADU 20X32

PREFLEX HOMES

No.	Description	Date

Roof View

Project number

Date Ago/29/2022

Drawn by OD

Checked by Verificador

A207

Scale 1/4" = 1'-0"

19/09/2022 04:58:09 p. m.

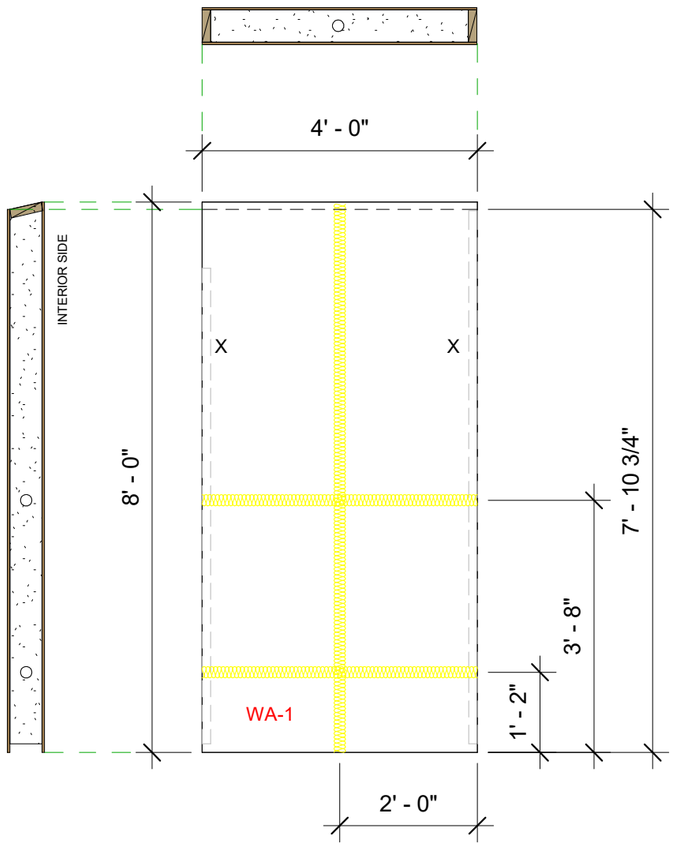

INTERIOR VIEW

1 WA-1
1/2" = 1'-0"

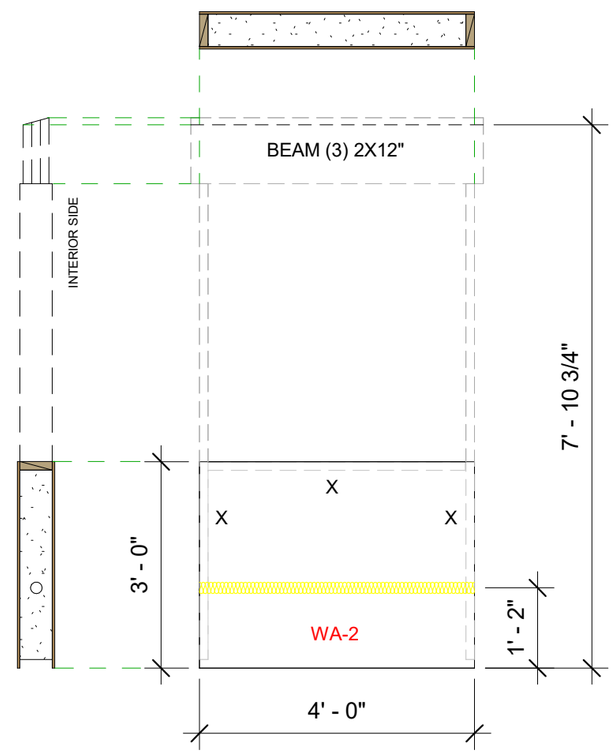

INTERIOR VIEW

2 WA-2
1/2" = 1'-0"

PREFLEX

ADU 20X32

PREFLEX HOMES

No.	Description	Date

Shop Drawing
WA-1, WA-2

Project number	
Date	Ago/29/2022
Drawn by	OD
Checked by	Verificador
A208	
Scale	1/2" = 1'-0"

19/09/2022 04:58:09 p. m.

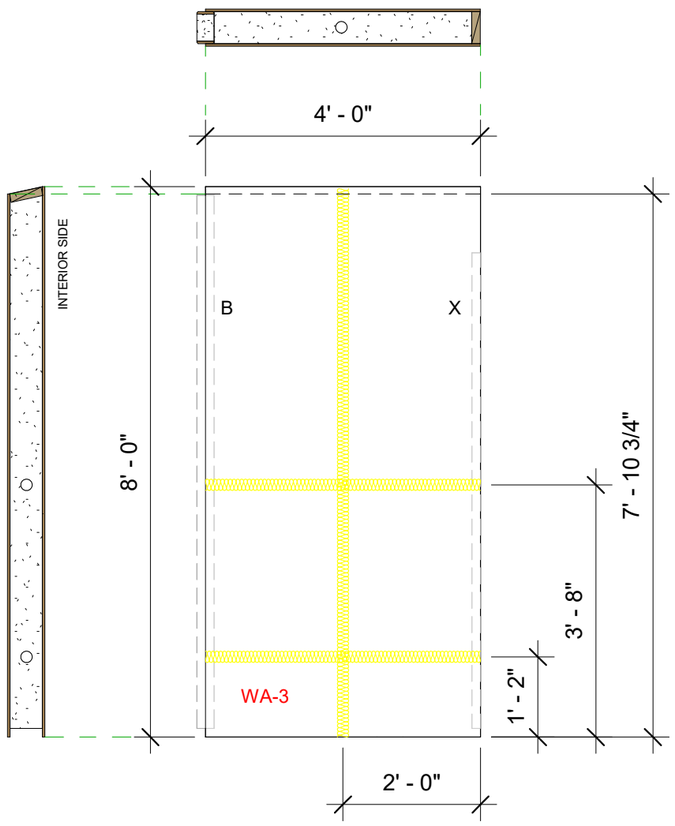

INTERIOR VIEW

1 WA-3
1/2" = 1'-0"

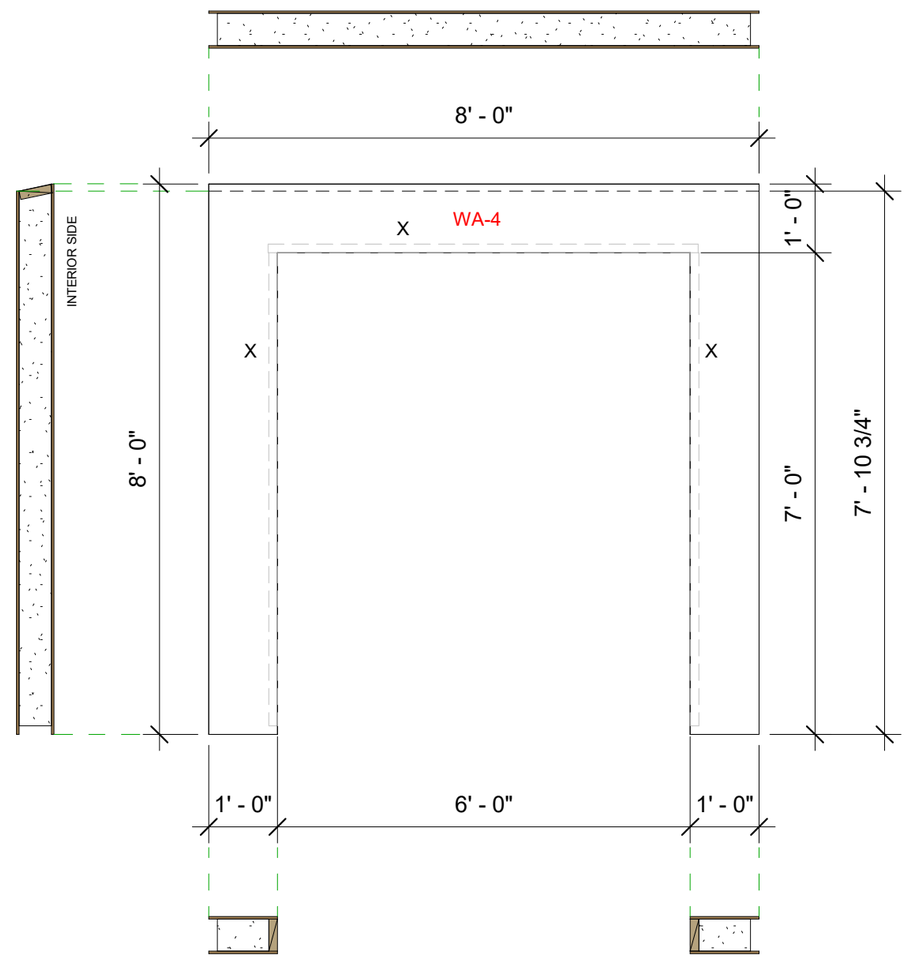

INTERIOR VIEW

2 WA-4
1/2" = 1'-0"

PREFLEX

ADU 20X32

PREFLEX HOMES

No.	Description	Date

Shop Drawing
WA-3, WA-4

Project number	
Date	Ago/29/2022
Drawn by	OD
Checked by	Verificador
A209	
Scale	1/2" = 1'-0"

19/09/2022 04:58:09 p. m.

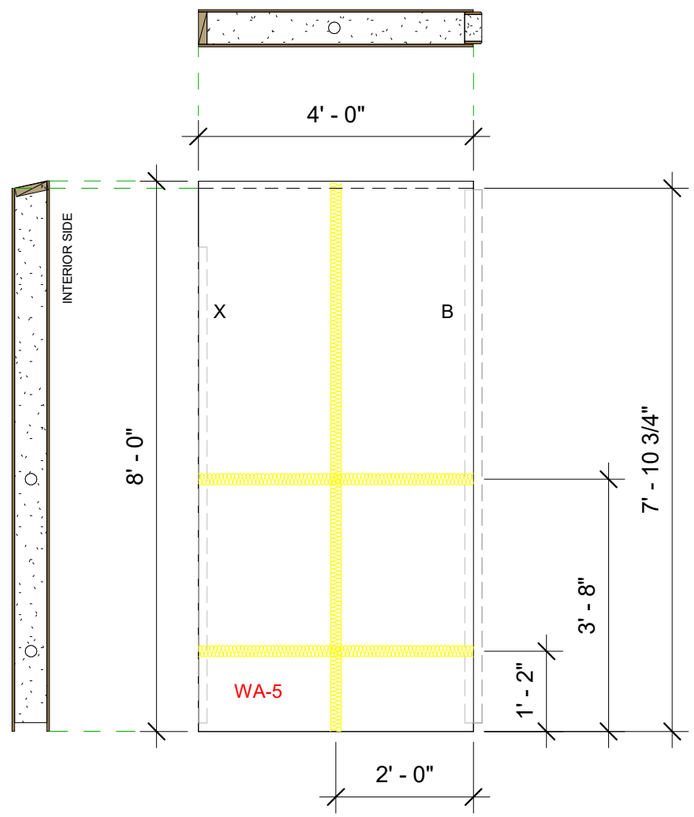

INTERIOR VIEW

1 WA-5
1/2" = 1'-0"

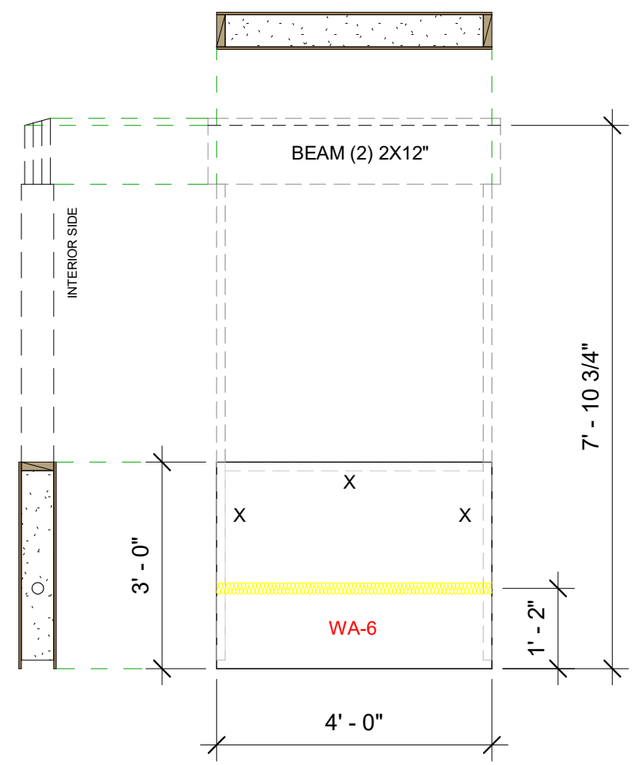

INTERIOR VIEW

2 WA-6
1/2" = 1'-0"

PREFLEX

ADU 20X32

PREFLEX HOMES

No.	Description	Date

Shop Drawing
WA-5, WA-6

Project number	
Date	Ago/29/2022
Drawn by	OD
Checked by	Verificador
A210	
Scale	1/2" = 1'-0"

19/09/2022 04:58:10 p. m.

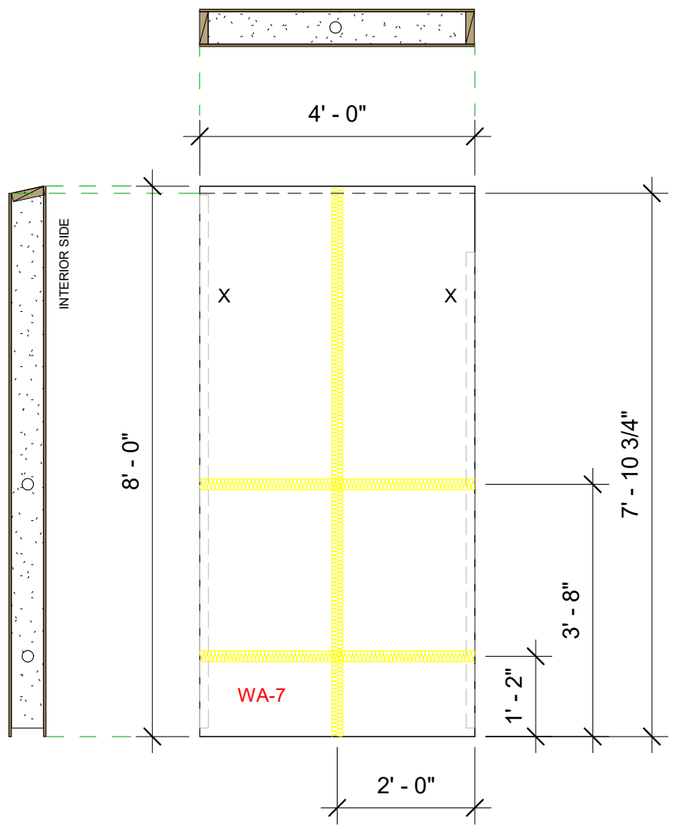

INTERIOR VIEW

1 WA-7
1/2" = 1'-0"

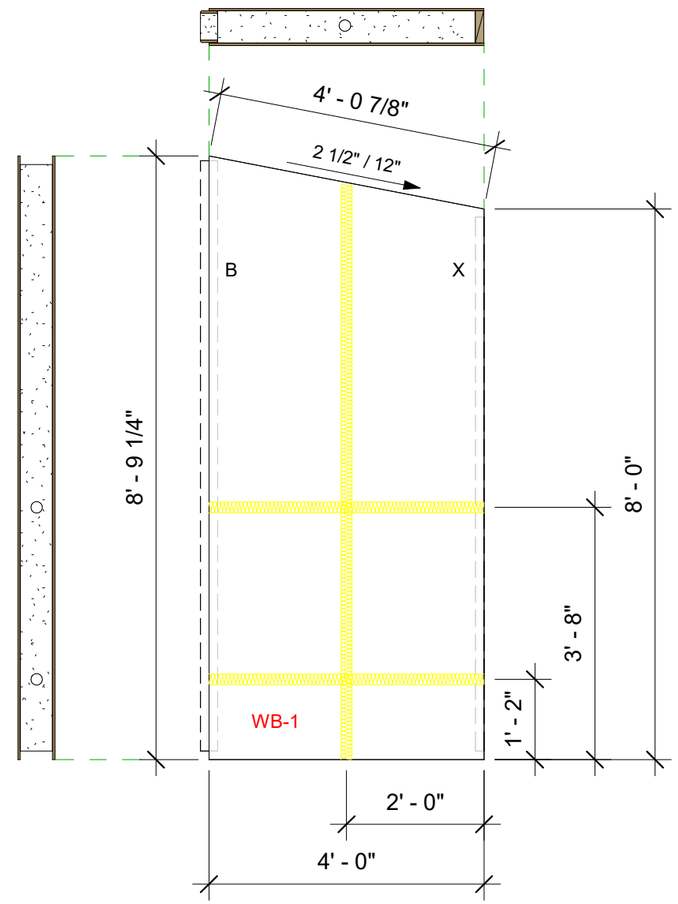

INTERIOR VIEW

2 WB-1
1/2" = 1'-0"

PREFLEX

ADU 20X32

PREFLEX HOMES

No.	Description	Date

Shop Drawing
WA-7, WB-1

Project number	
Date	Ago/29/2022
Drawn by	OD
Checked by	Verificador
A211	
Scale	1/2" = 1'-0"

19/09/2022 04:58:10 p. m.

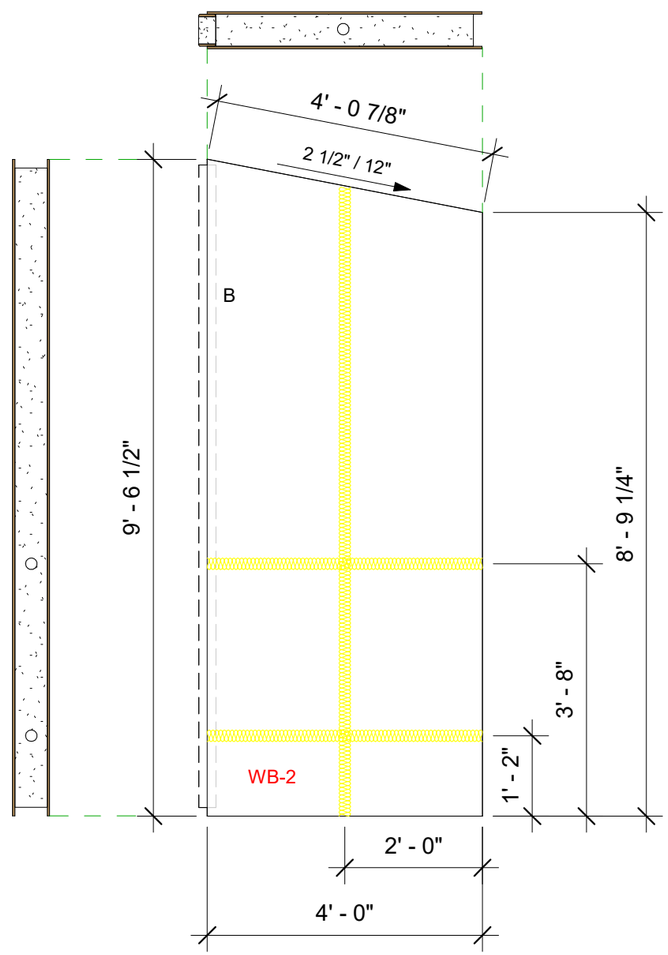

INTERIOR VIEW

1 WB-2
1/2" = 1'-0"

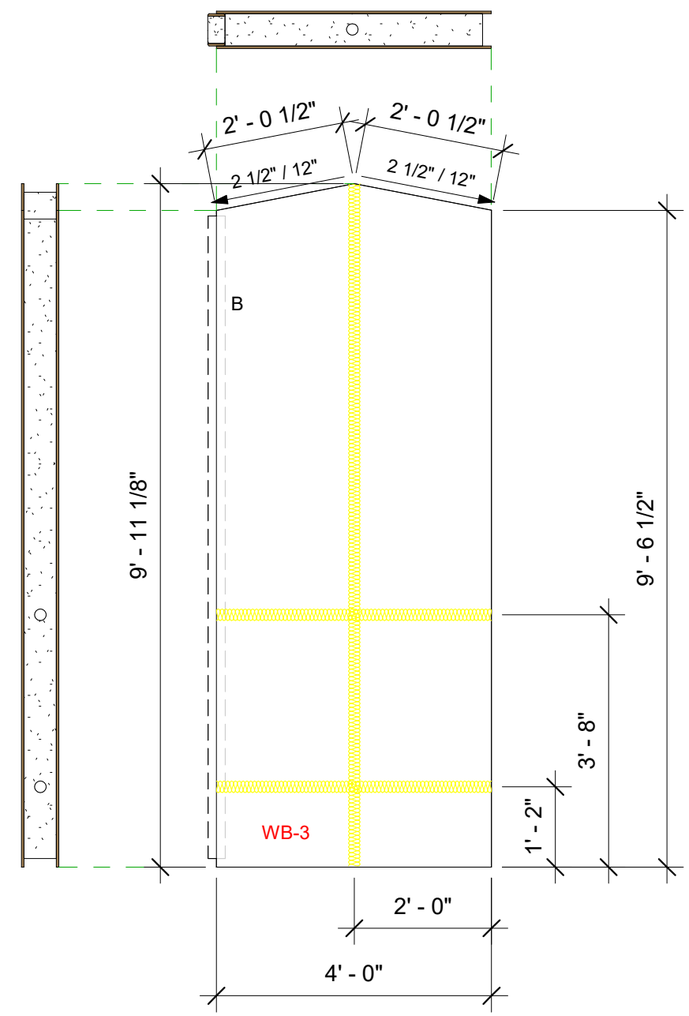

INTERIOR VIEW

2 WB-3
1/2" = 1'-0"

PREFLEX

ADU 20X32

PREFLEX HOMES

No.	Description	Date

Shop Drawing
WB-2, WB-3

Project number	
Date	Ago/29/2022
Drawn by	OD
Checked by	Verificador
A212	
Scale	1/2" = 1'-0"

19/09/2022 04:58:10 p. m.

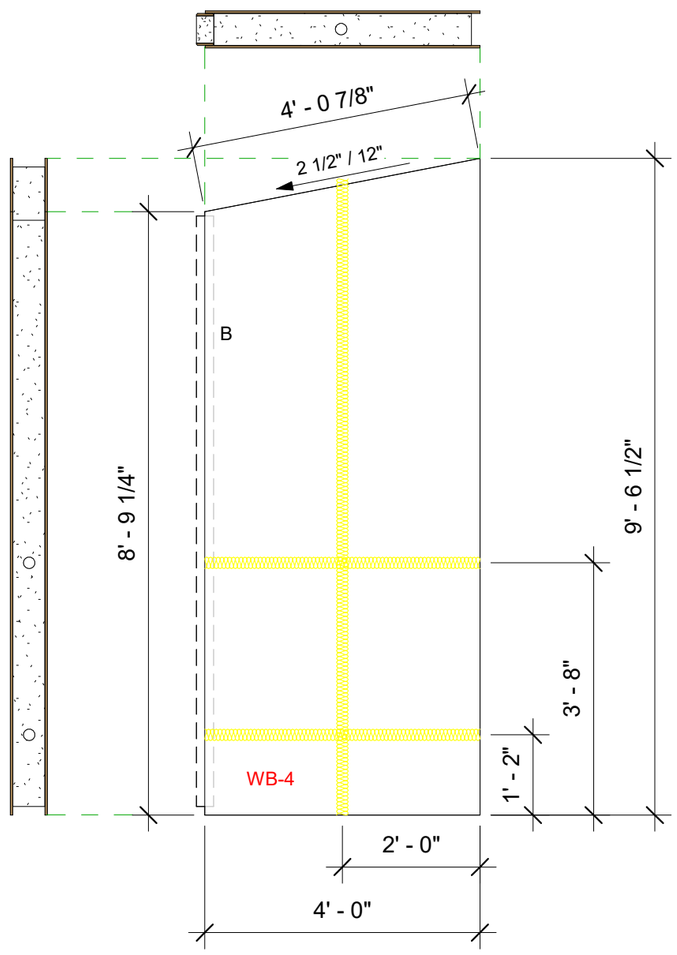

INTERIOR VIEW

1 WB-4
1/2" = 1'-0"

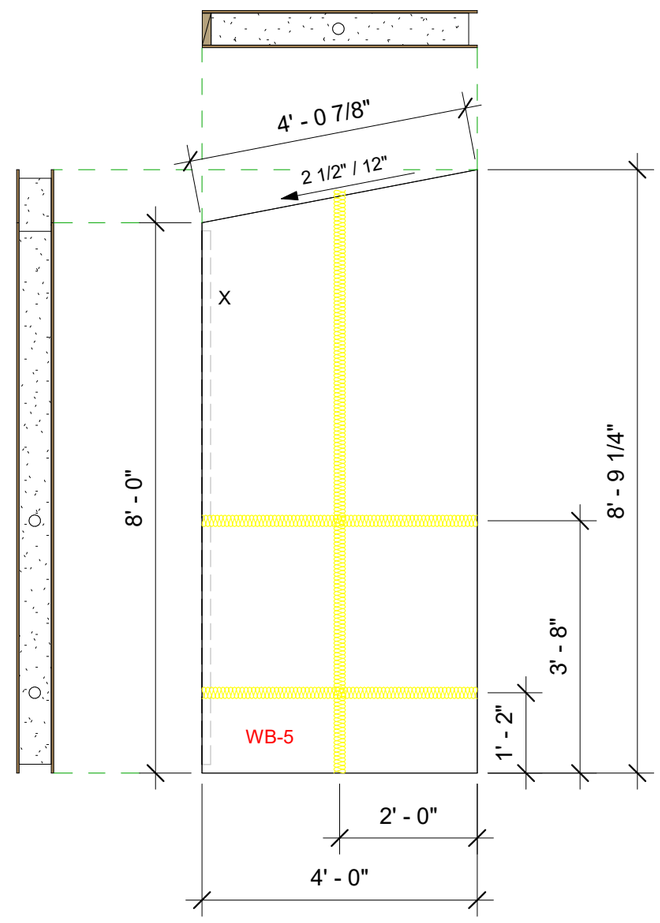

INTERIOR VIEW

2 WB-5
1/2" = 1'-0"

PREFLEX

ADU 20X32

PREFLEX HOMES

No.	Description	Date

Shop Drawing
WB-4, WB-5

Project number	
Date	Ago/29/2022
Drawn by	OD
Checked by	Verificador
A213	
Scale	1/2" = 1'-0"

19/09/2022 04:58:11 p. m.

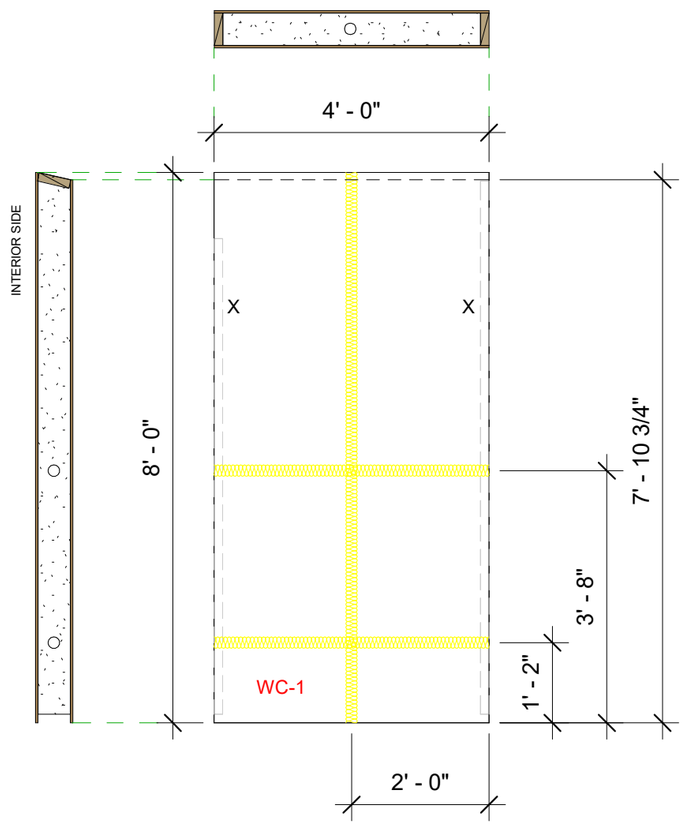

INTERIOR VIEW

1 WC-1
1/2" = 1'-0"

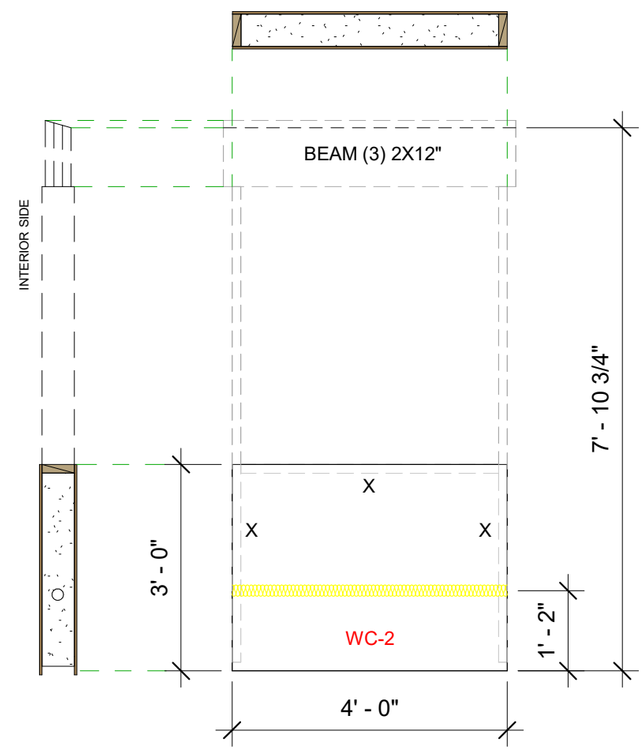

INTERIOR VIEW

2 WC-2
1/2" = 1'-0"

PREFLEX

ADU 20X32

PREFLEX HOMES

No.	Description	Date

Shop Drawing
WC-1, WC-2

Project number	
Date	Ago/29/2022
Drawn by	OD
Checked by	Verificador
A214	
Scale	1/2" = 1'-0"

19/09/2022 04:58:11 p. m.

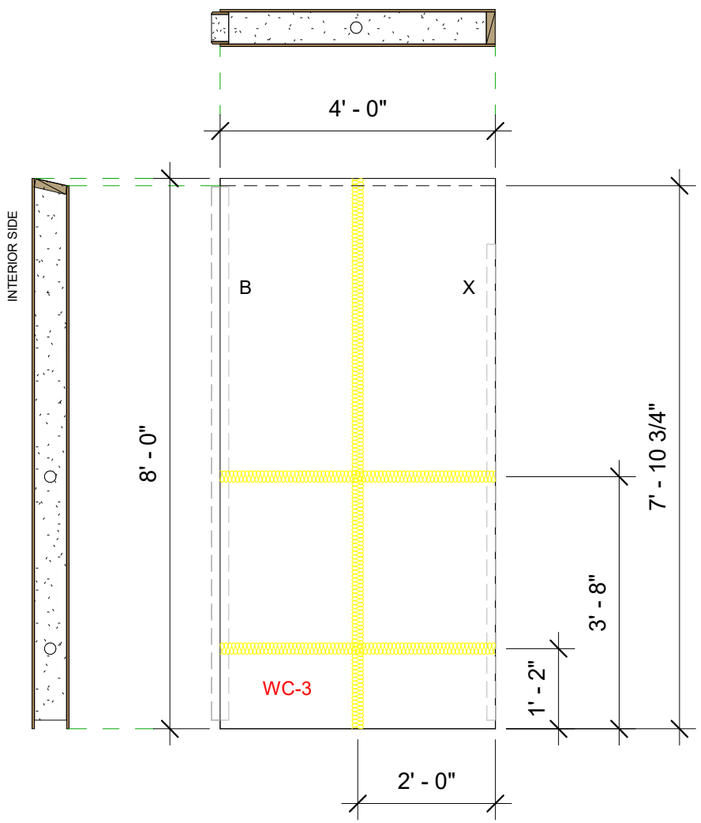

INTERIOR VIEW

1 WC-3
1/2" = 1'-0"

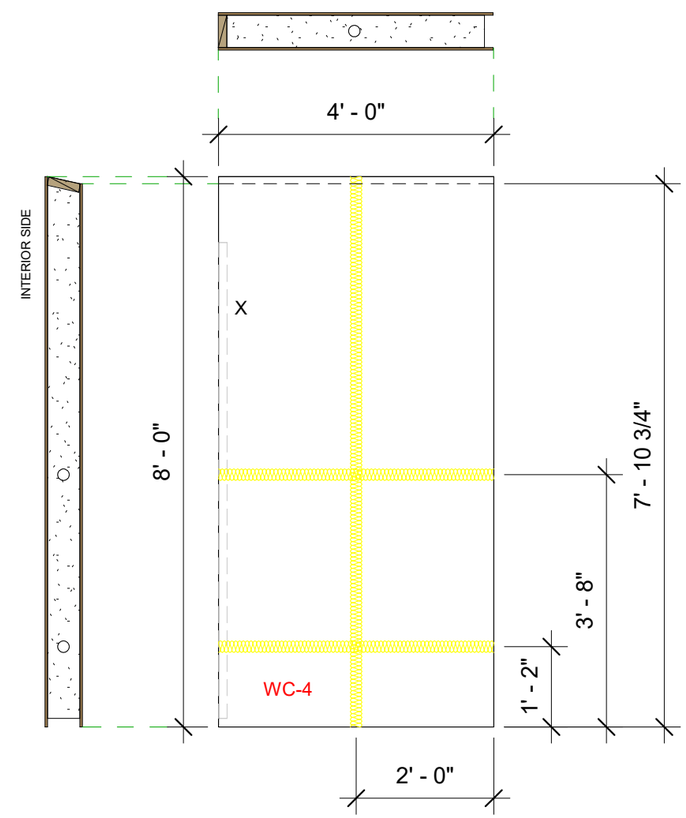

INTERIOR VIEW

2 WC-4
1/2" = 1'-0"

PREFLEX

ADU 20X32

PREFLEX HOMES

No.	Description	Date

Shop Drawing
WC-3, WC-4

Project number	
Date	Ago/29/2022
Drawn by	OD
Checked by	Verificador
A215	
Scale	1/2" = 1'-0"

19/09/2022 04:58:12 p. m.

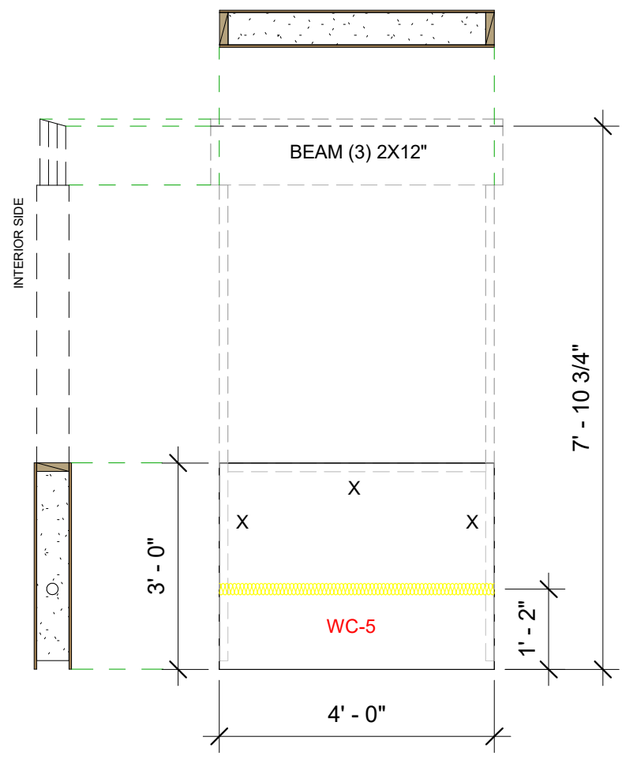

INTERIOR VIEW

1 WC-5
1/2" = 1'-0"

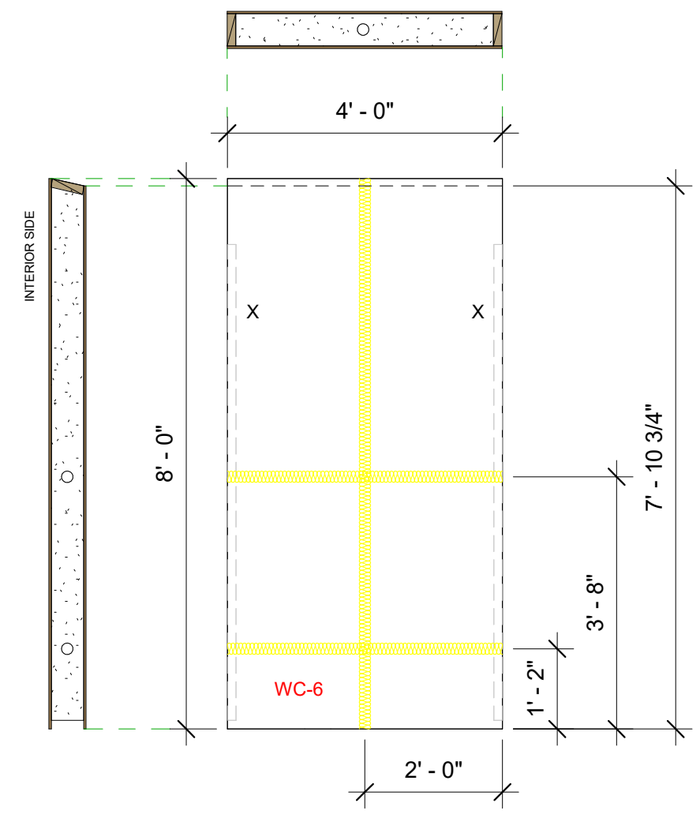

INTERIOR VIEW

2 WC-6
1/2" = 1'-0"

PREFLEX

ADU 20X32

PREFLEX HOMES

No.	Description	Date

Shop Drawing
WC-5, WC-6

Project number	
Date	Ago/29/2022
Drawn by	OD
Checked by	Verificador
A216	
Scale	1/2" = 1'-0"

19/09/2022 04:58:12 p. m.

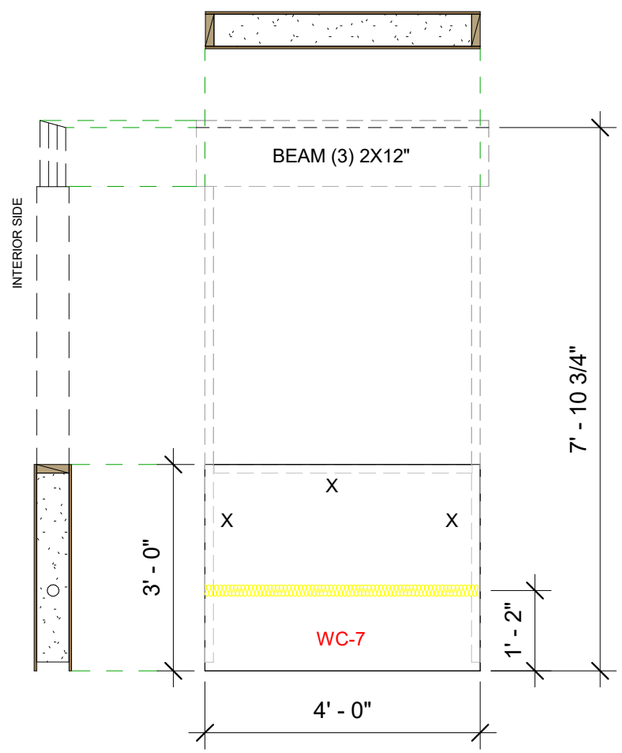

INTERIOR VIEW

1 WC-7
1/2" = 1'-0"

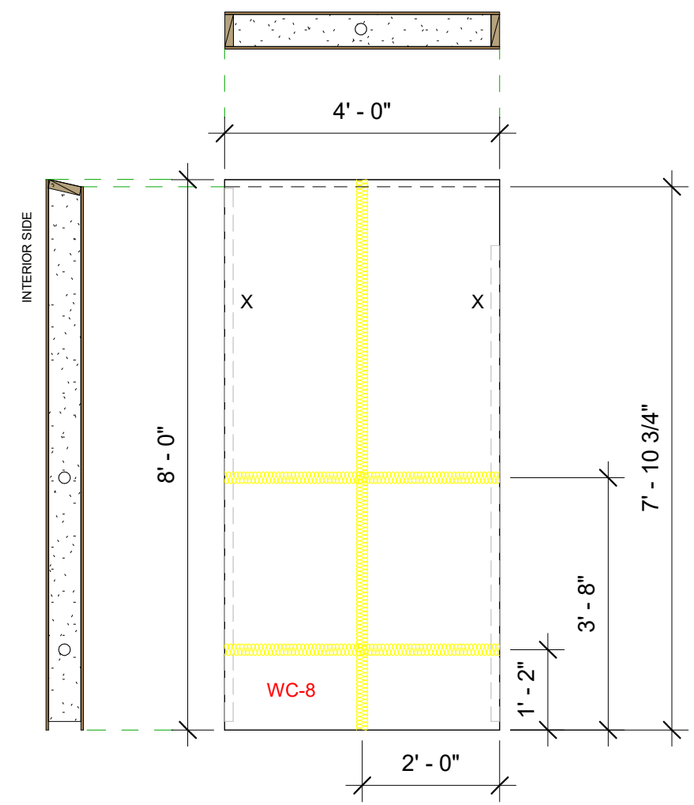

INTERIOR VIEW

2 WC-8
1/2" = 1'-0"

PREFLEX

ADU 20X32

PREFLEX HOMES

No.	Description	Date

Shop Drawing
WC-7, WC-8

Project number	
Date	Ago/29/2022
Drawn by	OD
Checked by	Verificador
A217	
Scale	1/2" = 1'-0"

19/09/2022 04:58:13 p. m.

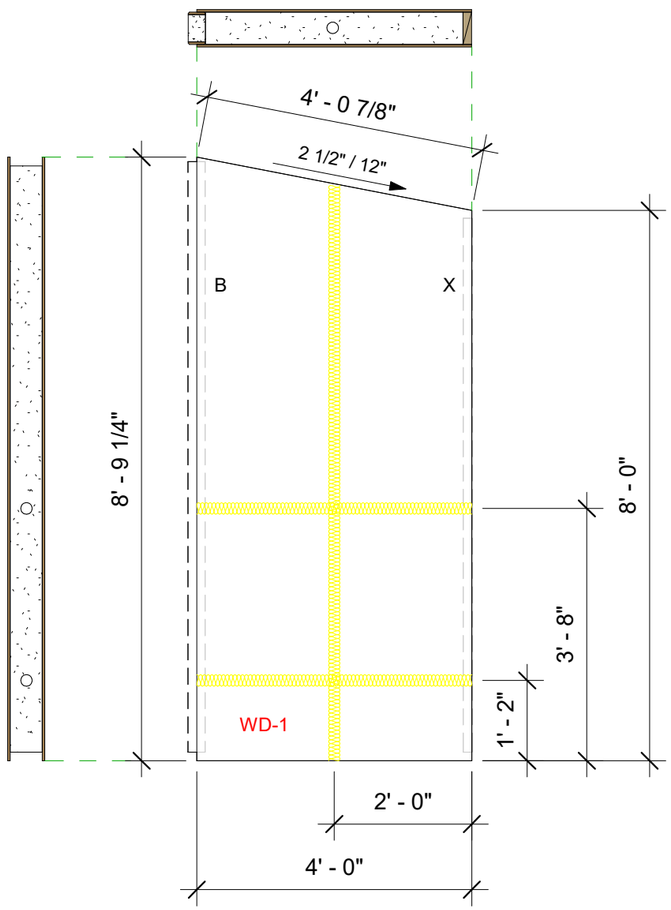

INTERIOR VIEW

1 WD-1
1/2" = 1'-0"

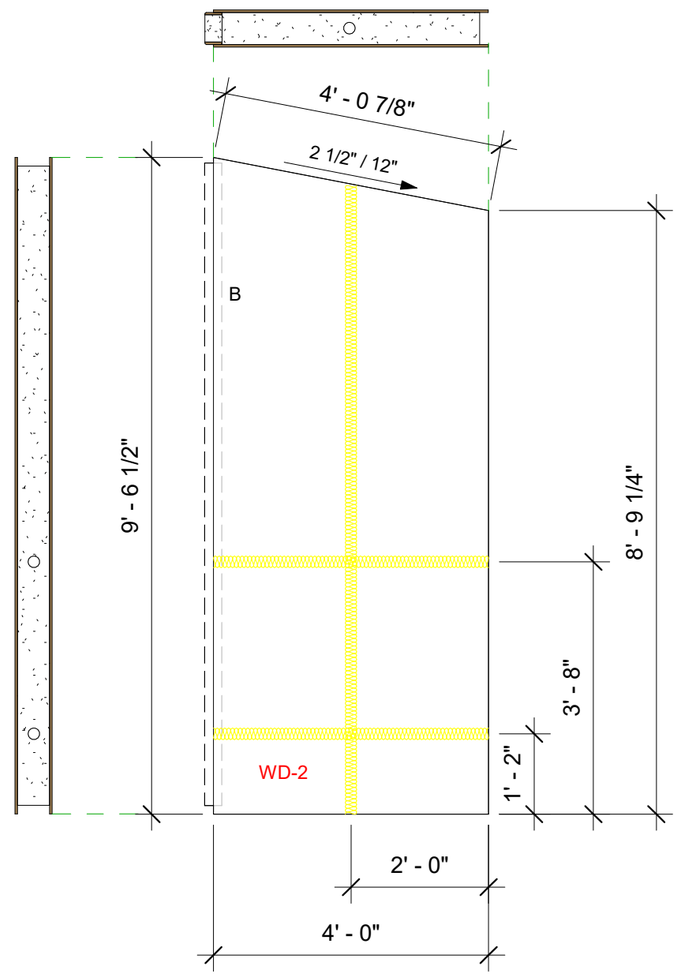

INTERIOR VIEW

2 WD-2
1/2" = 1'-0"

PREFLEX

ADU 20X32

PREFLEX HOMES

No.	Description	Date

Shop Drawing
WD-1, WD-2

Project number	
Date	Ago/29/2022
Drawn by	OD
Checked by	Verificador
A218	
Scale	1/2" = 1'-0"

19/09/2022 04:58:13 p. m.

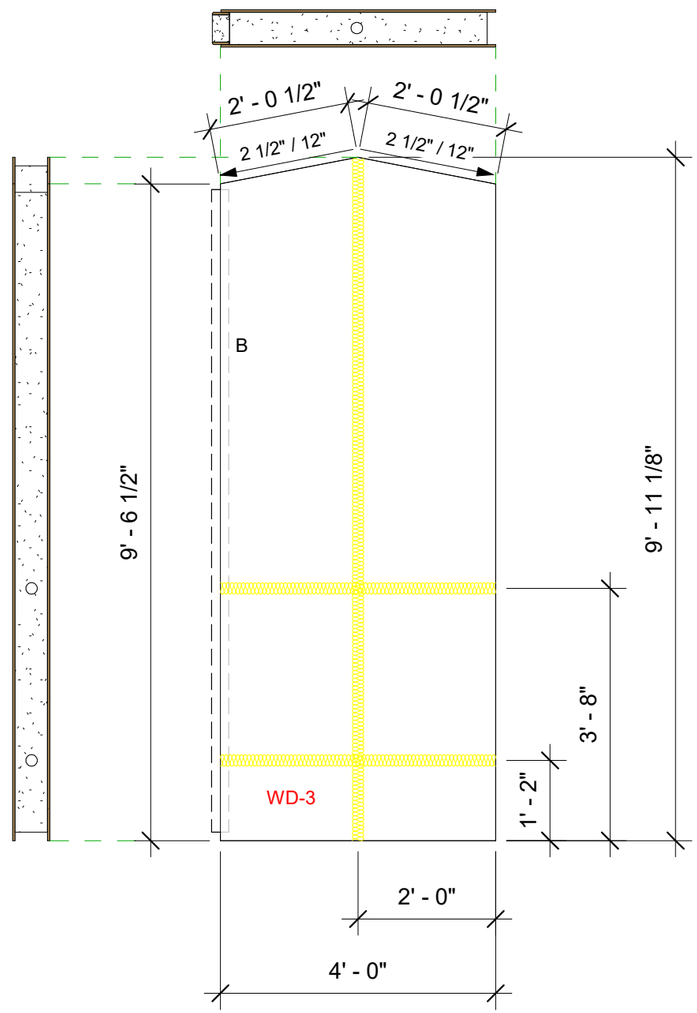

INTERIOR VIEW

1 WD-3
1/2" = 1'-0"

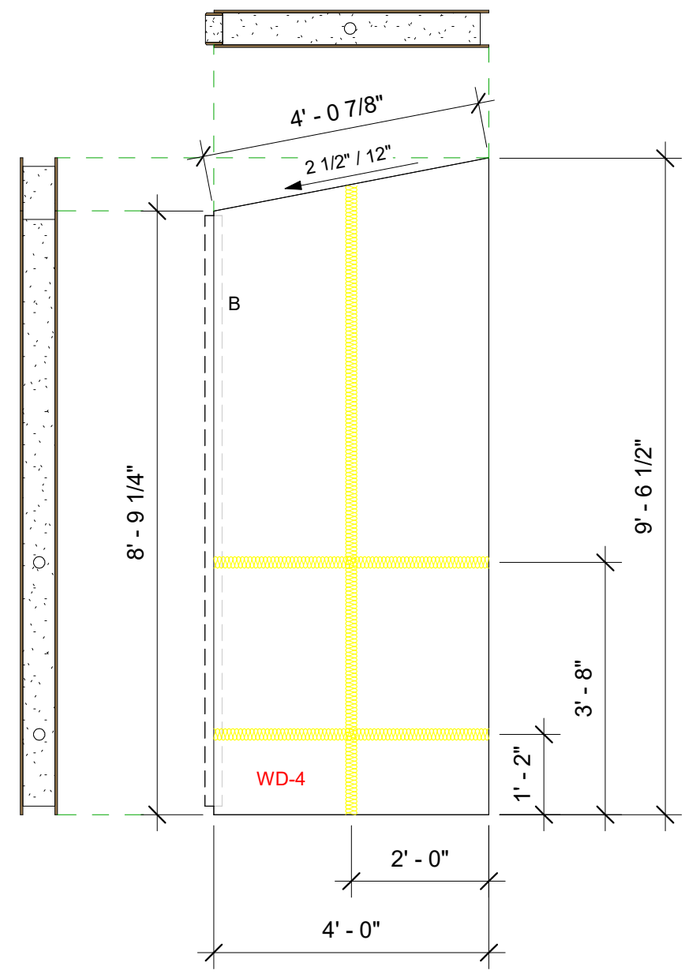

INTERIOR VIEW

2 WD-4
1/2" = 1'-0"

PREFLEX

ADU 20X32

PREFLEX HOMES

No.	Description	Date

Shop Drawing
WD-3, WD-4

Project number	
Date	Ago/29/2022
Drawn by	OD
Checked by	Verificador
A219	
Scale	1/2" = 1'-0"

19/09/2022 04:58:14 p. m.

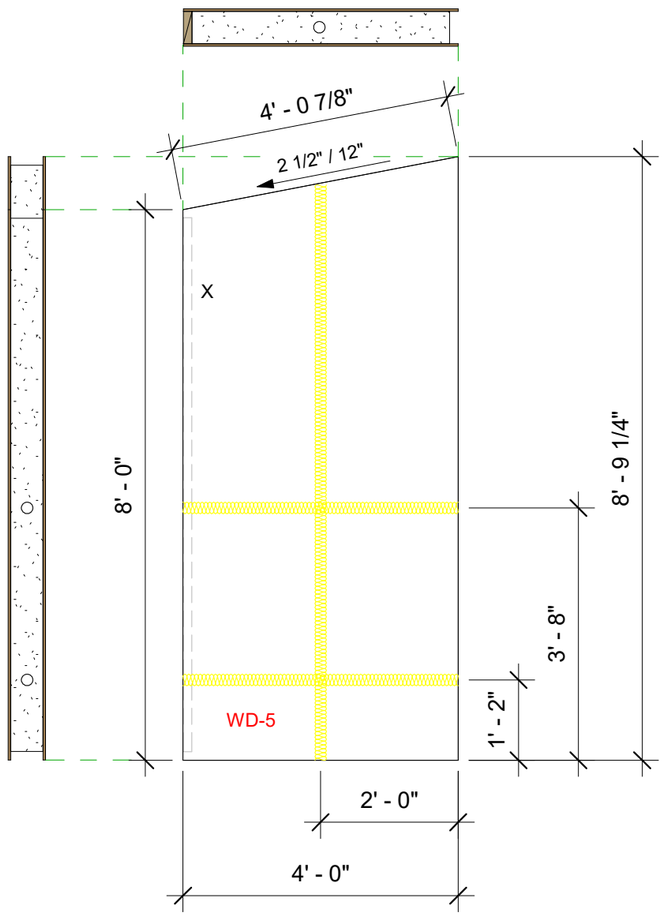

INTERIOR VIEW

1 WD-5
1/2" = 1'-0"

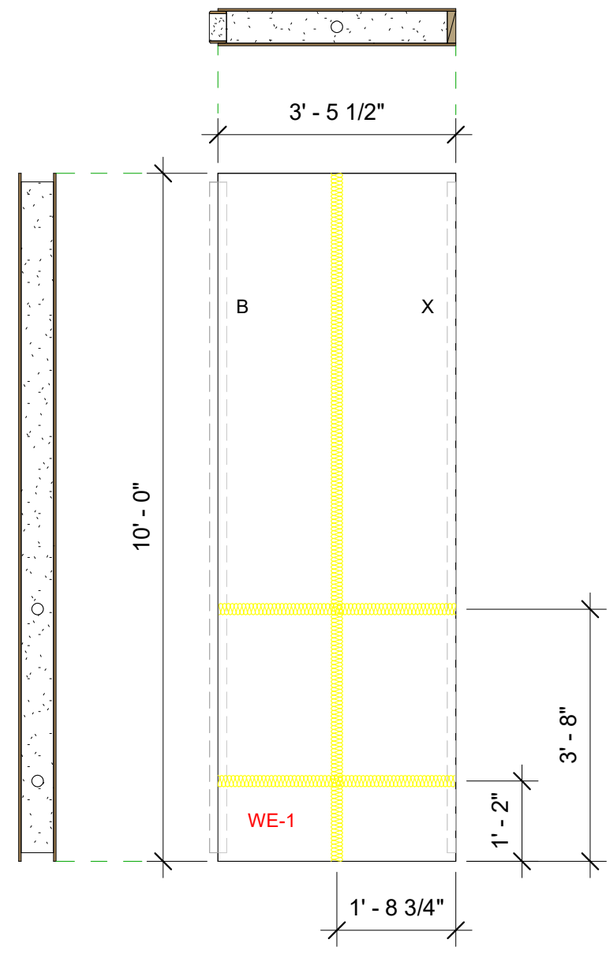

INTERIOR VIEW

2 WE-1
1/2" = 1'-0"

View from C Wall

PREFLEX

ADU 20X32

PREFLEX HOMES

No.	Description	Date

Shop Drawing
WD-5, WE-1

Project number	
Date	Ago/29/2022
Drawn by	OD
Checked by	Verificador
A220	
Scale	1/2" = 1'-0"

19/09/2022 04:58:14 p. m.

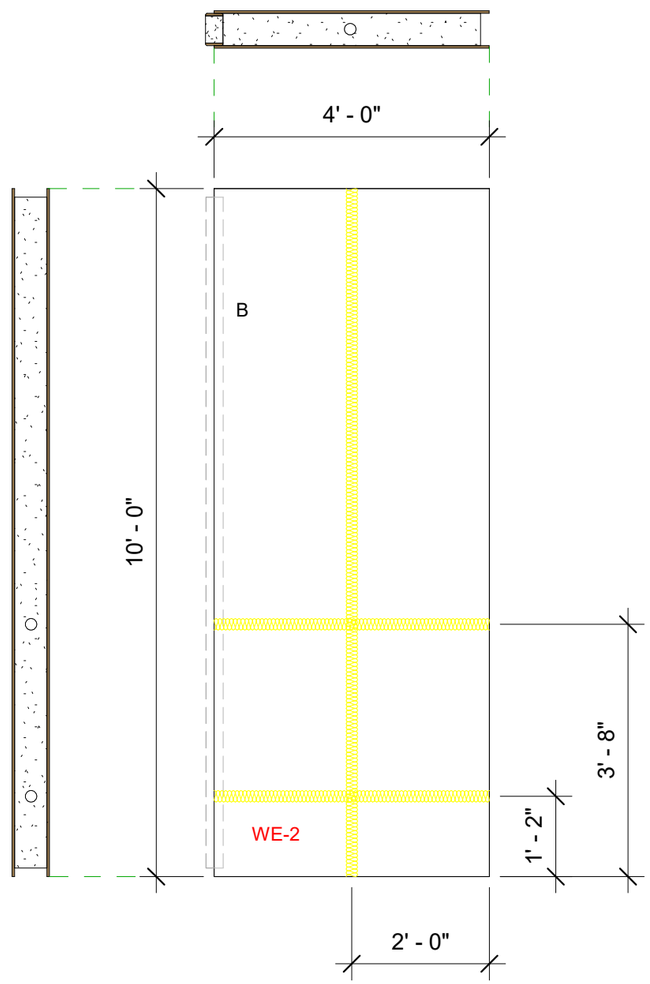

INTERIOR VIEW

1 WE-2
1/2" = 1'-0"

View from C Wall

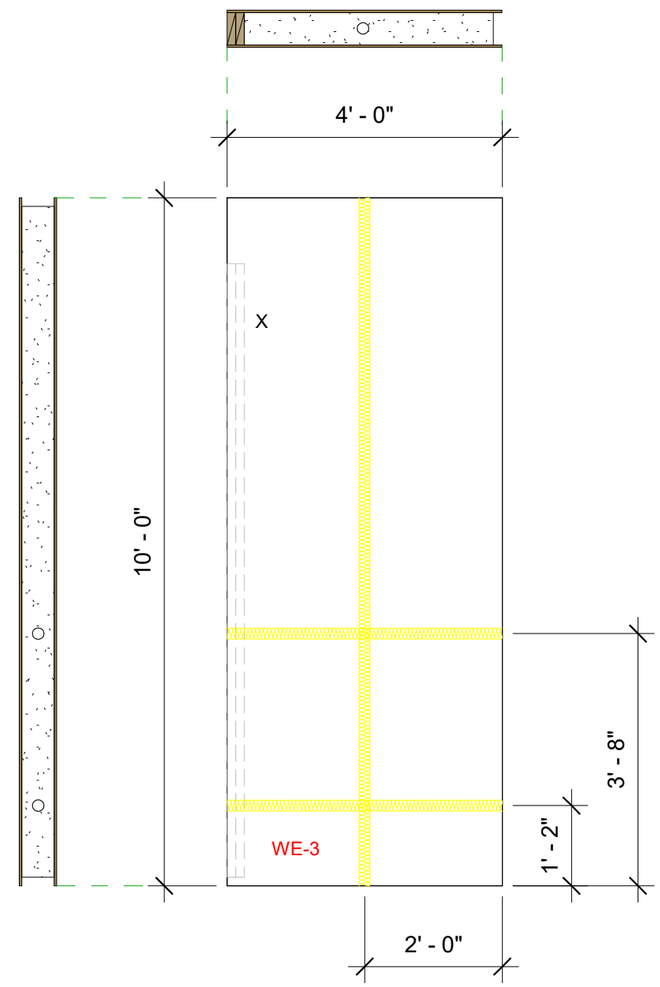

INTERIOR VIEW

2 WE-3
1/2" = 1'-0"

View from C Wall

PREFLEX

ADU 20X32

PREFLEX HOMES

No.	Description	Date

Shop Drawing
WE-2, WE-3

Project number	
Date	Ago/29/2022
Drawn by	OD
Checked by	Verificador
A221	
Scale	1/2" = 1'-0"

19/09/2022 04:58:15 p. m.

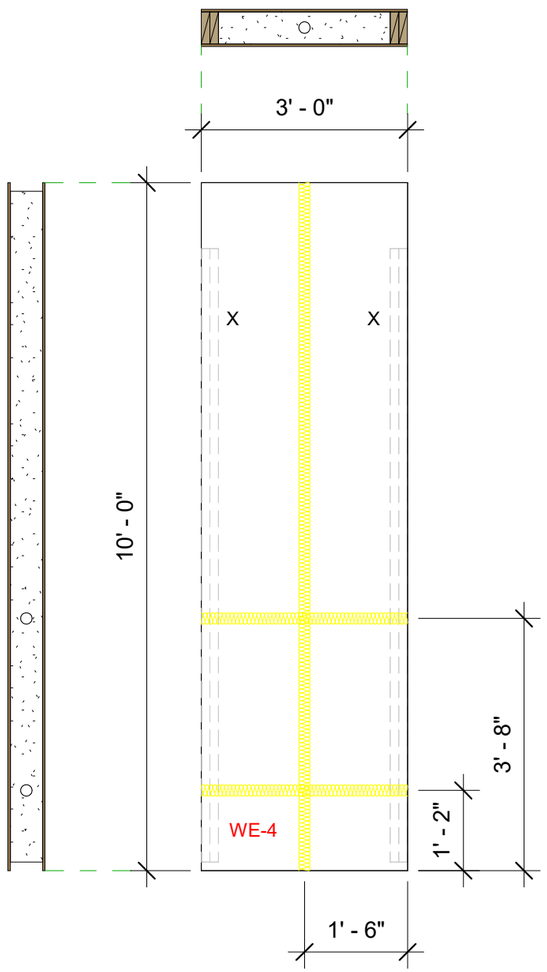

INTERIOR VIEW

1 WE-4
1/2" = 1'-0"

View from C Wall

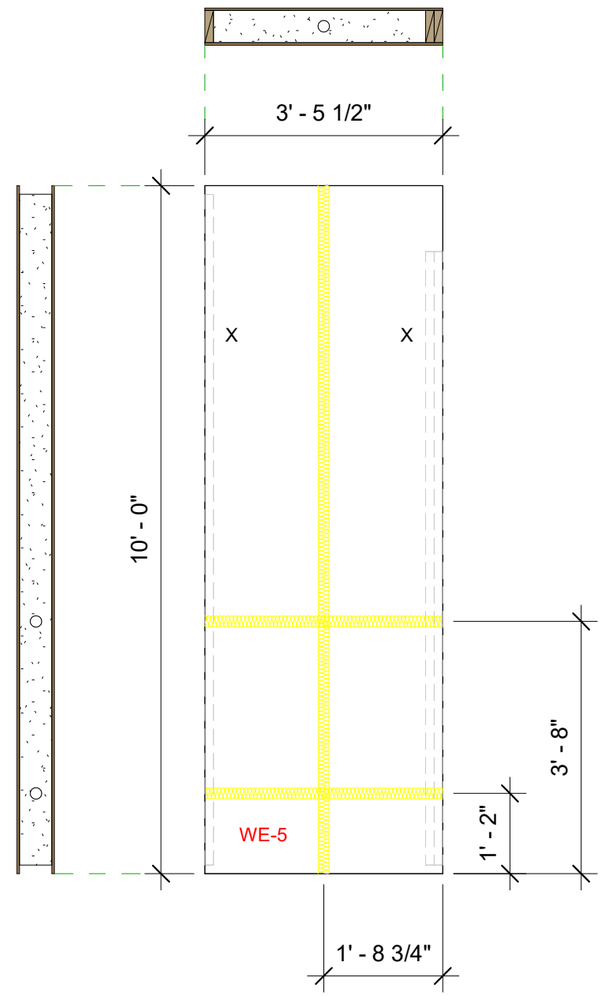

INTERIOR VIEW

2 WE-5
1/2" = 1'-0"

View from C Wall

PREFLEX

ADU 20X32

PREFLEX HOMES

No.	Description	Date

Shop Drawing
WE-4, WE-5

Project number	
Date	Ago/29/2022
Drawn by	OD
Checked by	Verificador
A222	
Scale	1/2" = 1'-0"

19/09/2022 04:58:15 p. m.

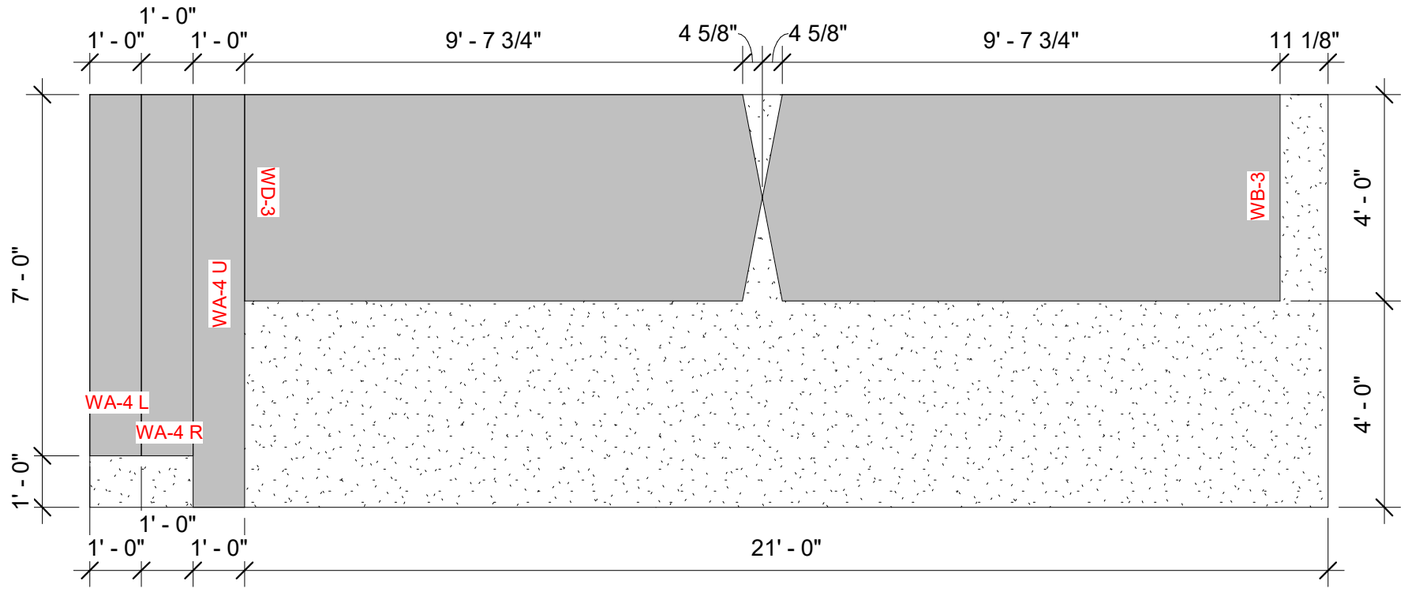

Exploitation: 52.47% - Waste: 47.53%

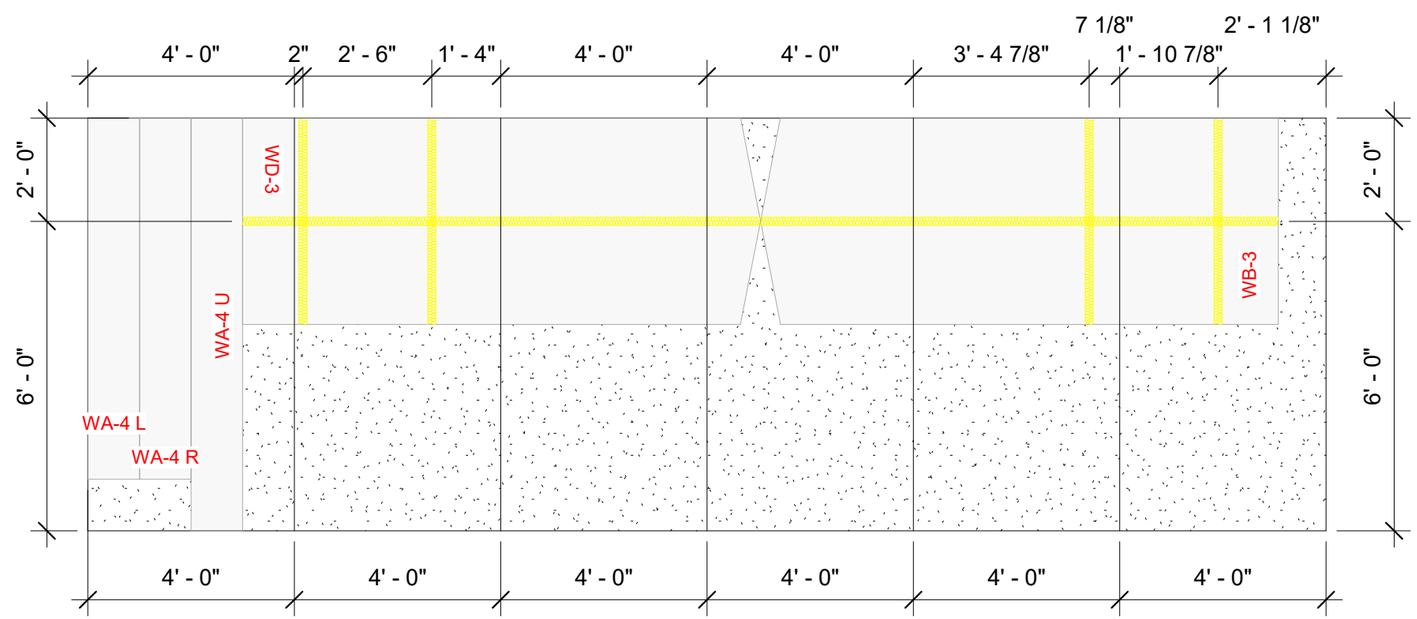

PREFLEX

ADU 20X32

PREFLEX HOMES

No.	Description	Date

Wall 6"_Cutting Panel 1

Project number	
Date	Ago/29/2022
Drawn by	OD
Checked by	Verificador
A300	
Scale	3/8" = 1'-0"

19/09/2022 04:58:16 p. m.

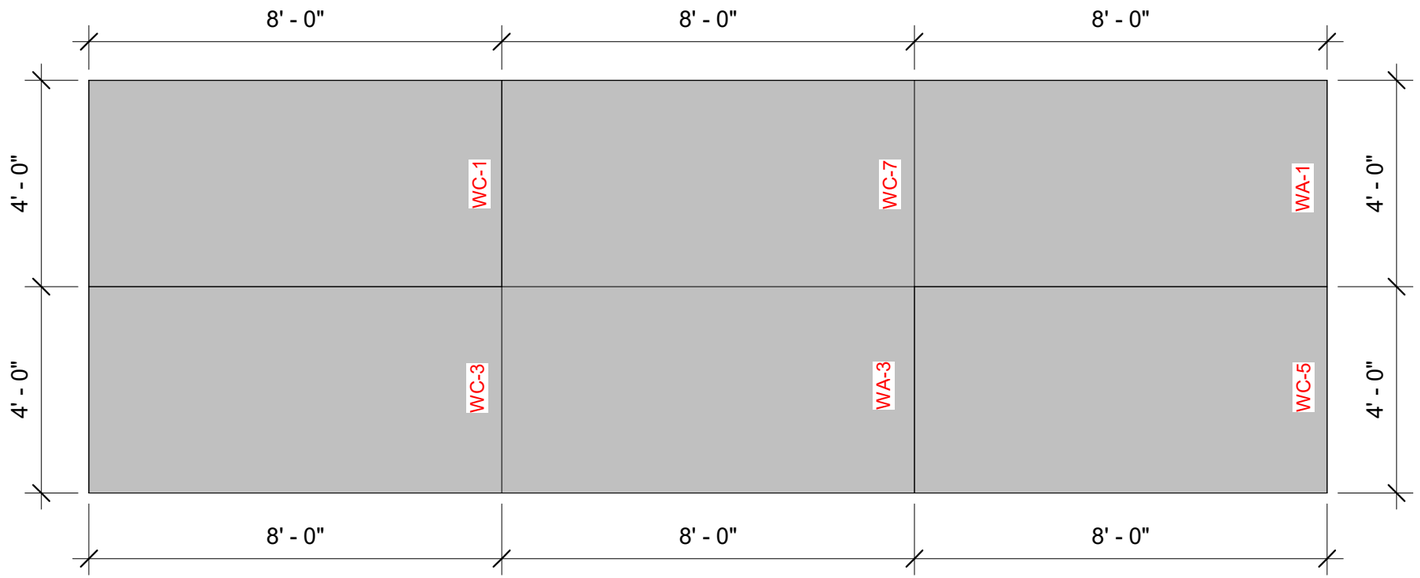

Exploitation: 100% - Waste: 0%

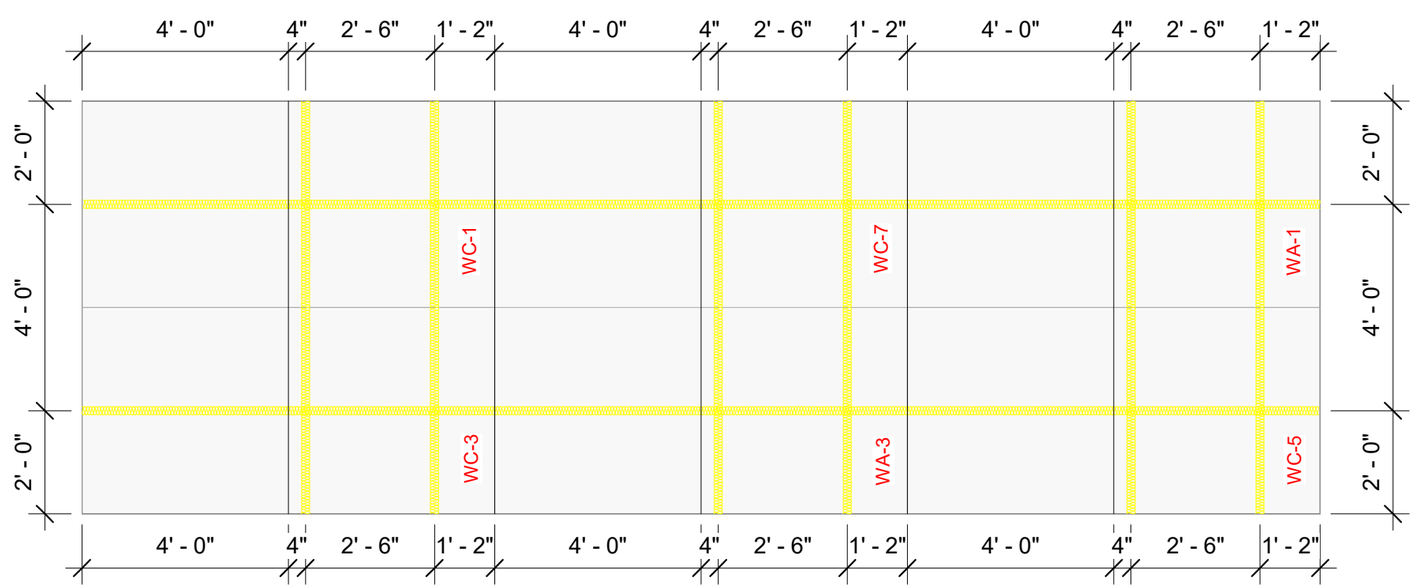

PREFLEX

ADU 20X32

PREFLEX HOMES

No.	Description	Date

Wall 6"_Cutting Panel 2

Project number	
Date	Ago/29/2022
Drawn by	OD
Checked by	Verificador
	A301
Scale	3/8" = 1'-0"

19/09/2022 04:58:17 p. m.

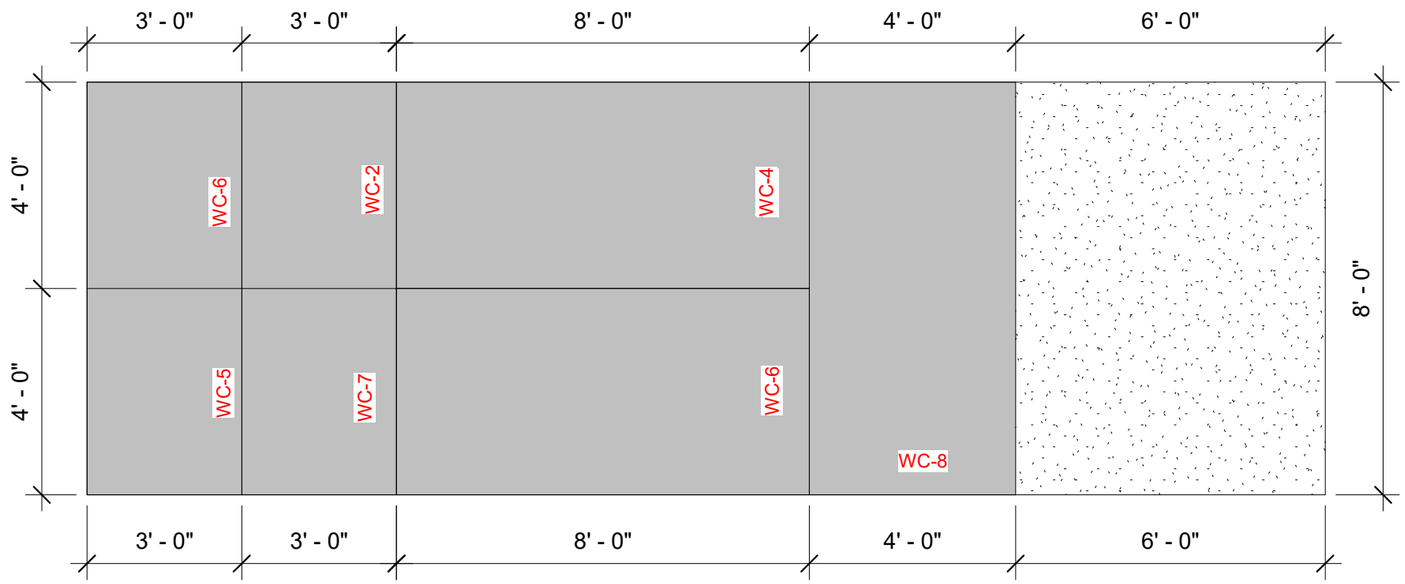

Exploitation: 75% - Waste: 25%

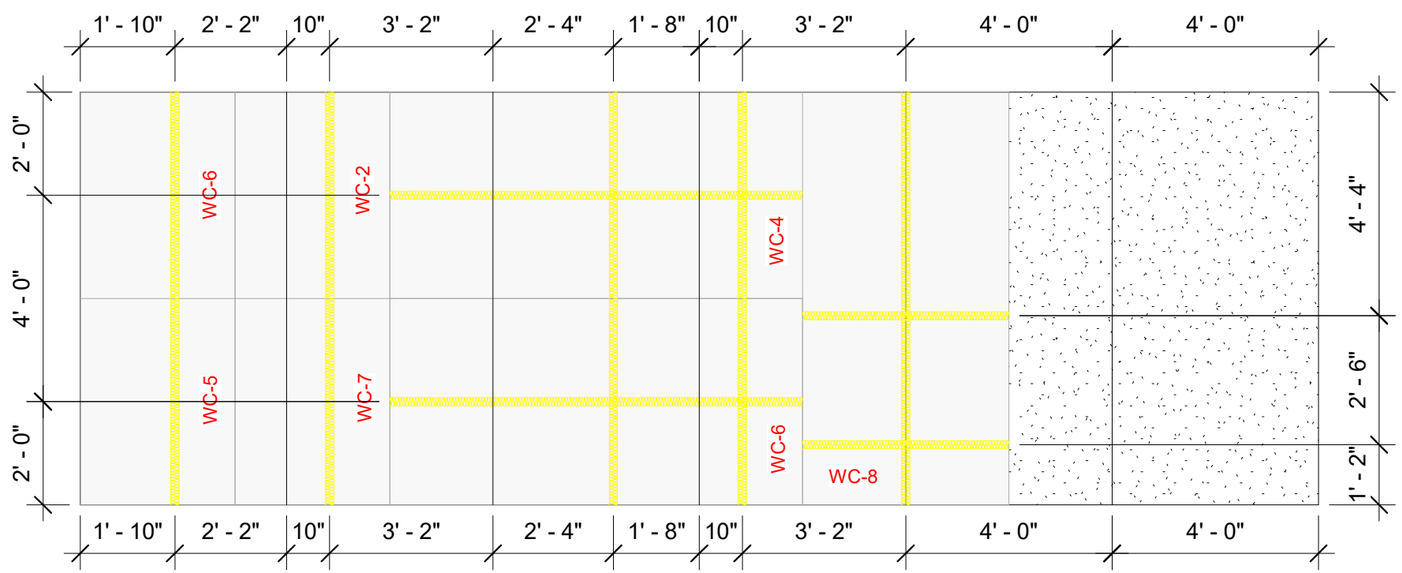

PREFLEX

ADU 20X32

PREFLEX HOMES

No.	Description	Date

Wall 6"_Cutting Panel 3

Project number	
Date	Ago/29/2022
Drawn by	OD
Checked by	Verificador
A302	
Scale	3/8" = 1'-0"

19/09/2022 04:58:17 p. m.

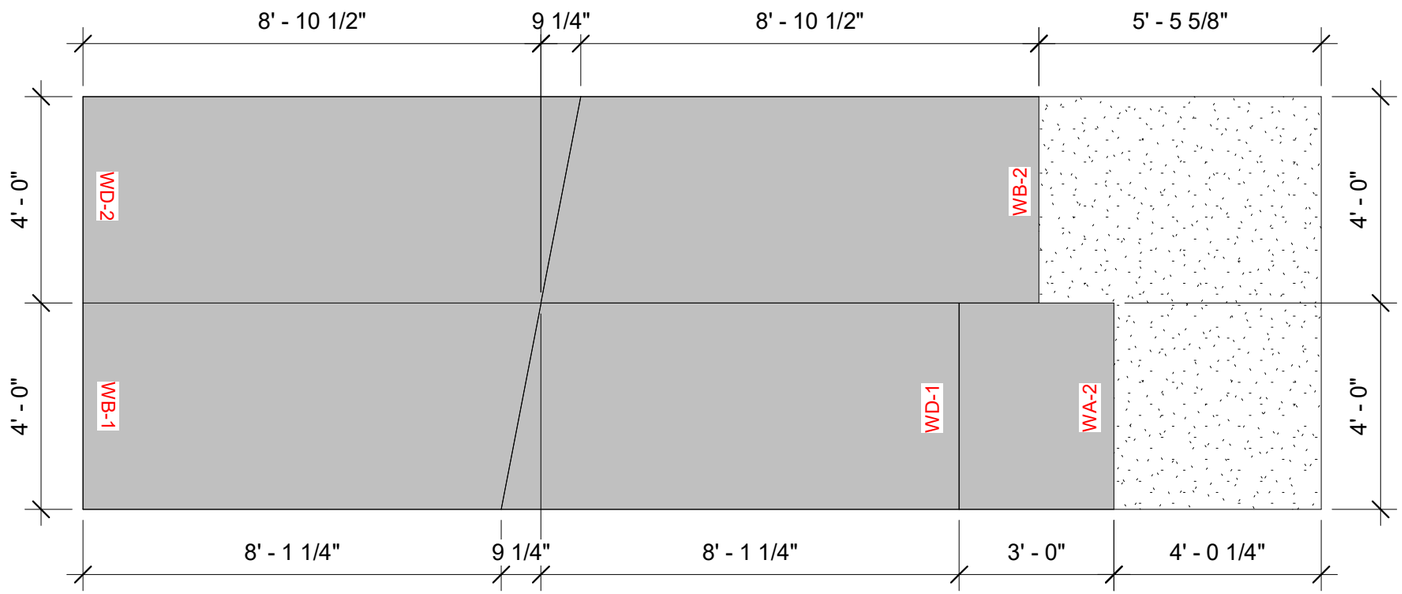

Exploitation: 80.23% - Waste: 19.77%

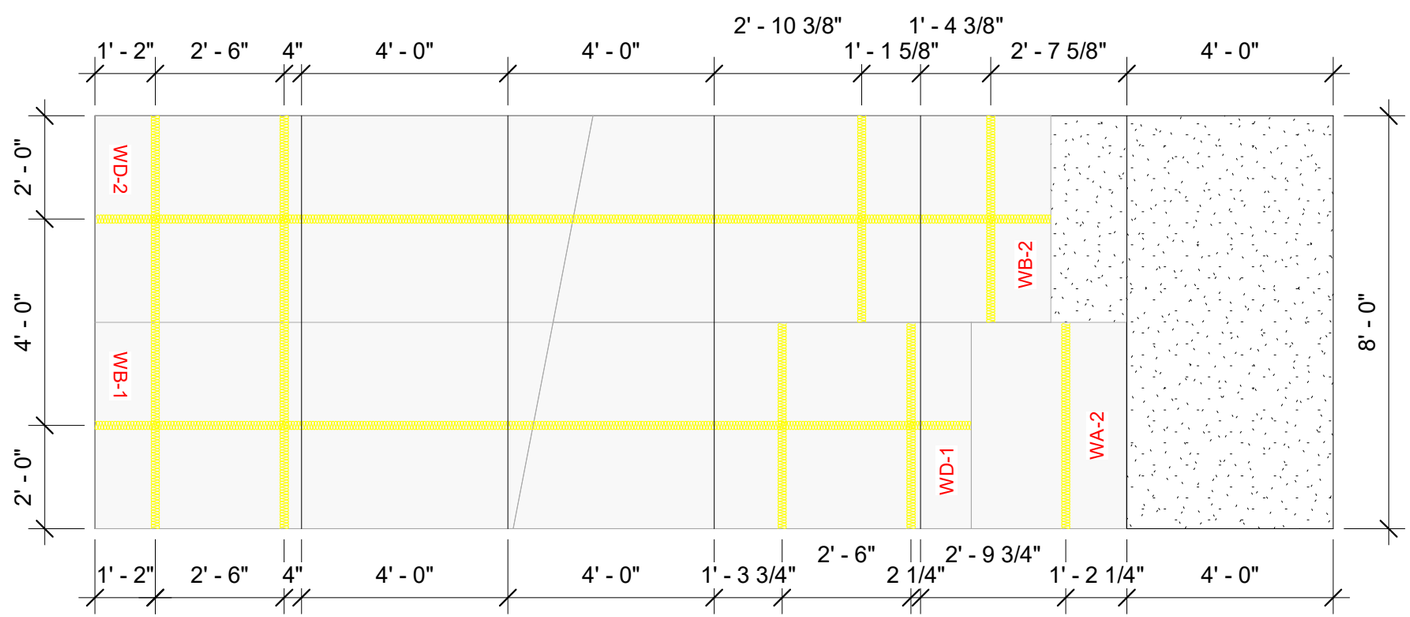

PREFLEX

ADU 20X32

PREFLEX HOMES

No.	Description	Date

Wall 6"_Cutting Panel 4

Project number	
Date	Ago/29/2022
Drawn by	OD
Checked by	Verificador
A303	
Scale	3/8" = 1'-0"

19/09/2022 04:58:18 p. m.

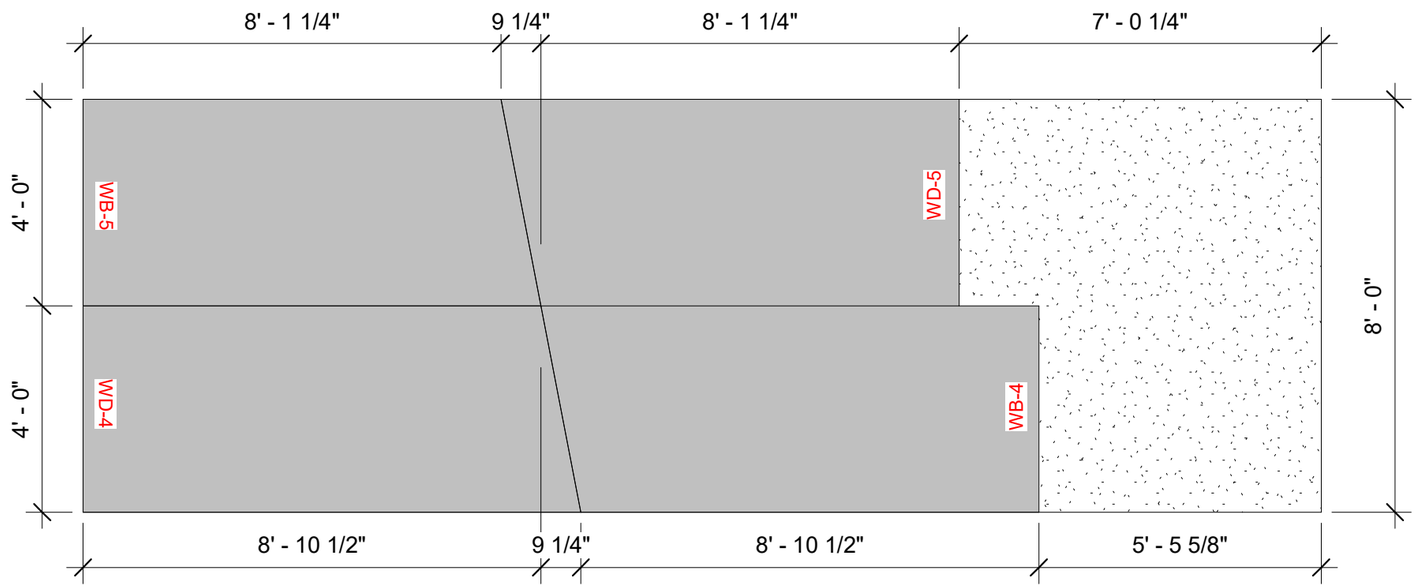

Exploitation: 73.98% - Waste: 26.02%

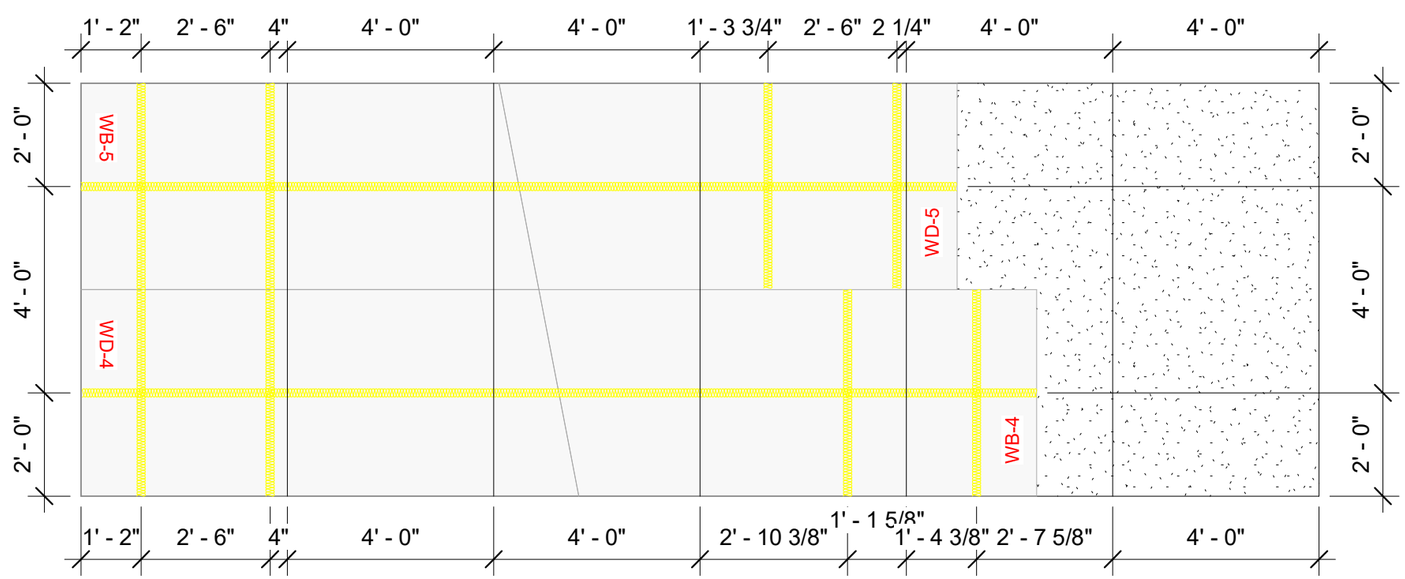

PREFLEX

ADU 20X32

PREFLEX HOMES

No.	Description	Date

Wall 6"_Cutting Panel 5

Project number	
Date	Ago/29/2022
Drawn by	OD
Checked by	Verificador
A304	
Scale	3/8" = 1'-0"

19/09/2022 04:58:19 p. m.

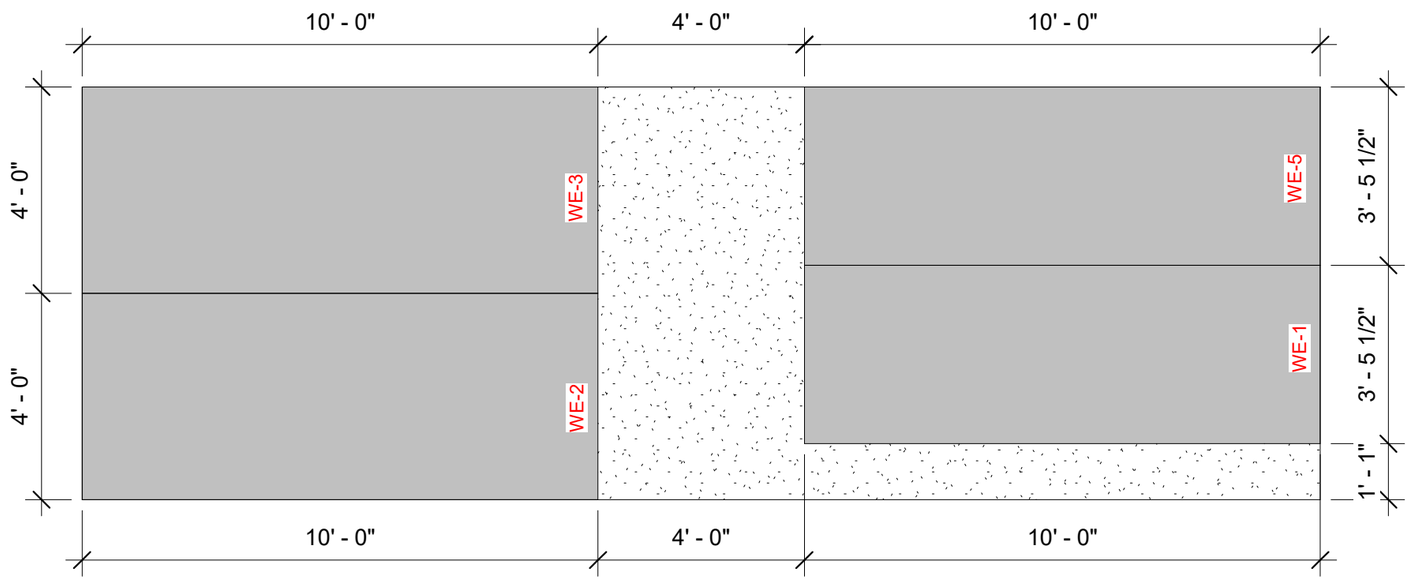

Exploitation: 77.69% - Waste: 22.31%

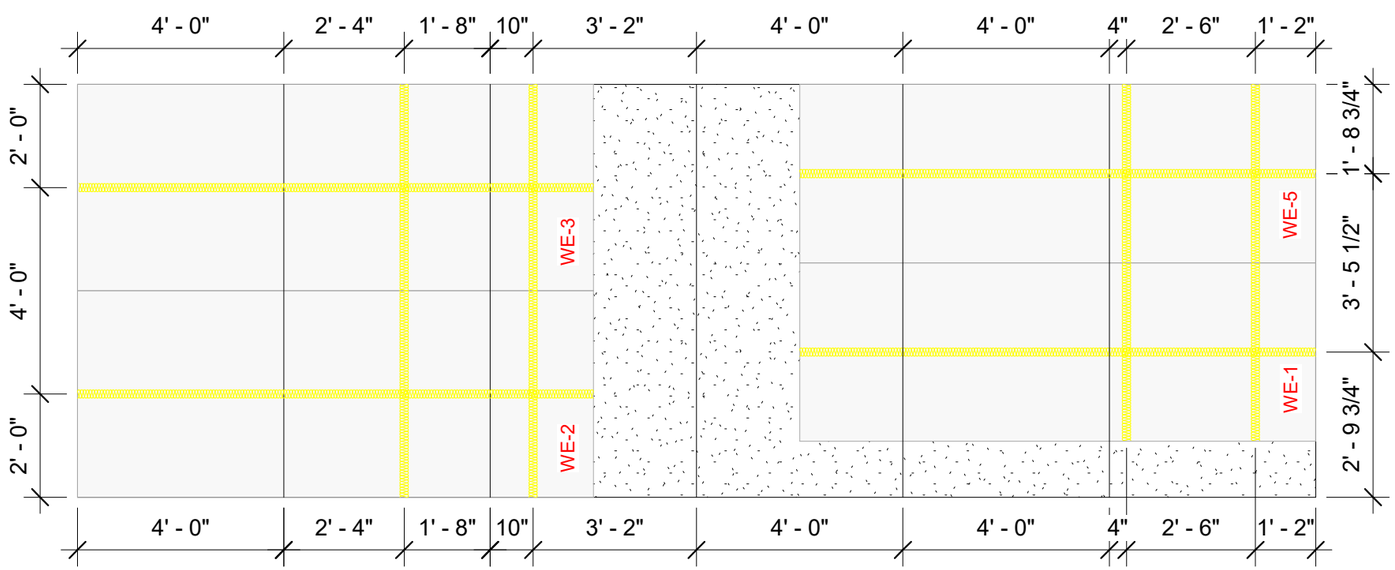

PREFLEX

ADU 20X32

PREFLEX HOMES

No.	Description	Date

Wall 4"_Cutting Panel 6

Project number	
Date	Ago/29/2022
Drawn by	OD
Checked by	Verificador
A305	
Scale	3/8" = 1'-0"

19/09/2022 04:58:19 p. m.

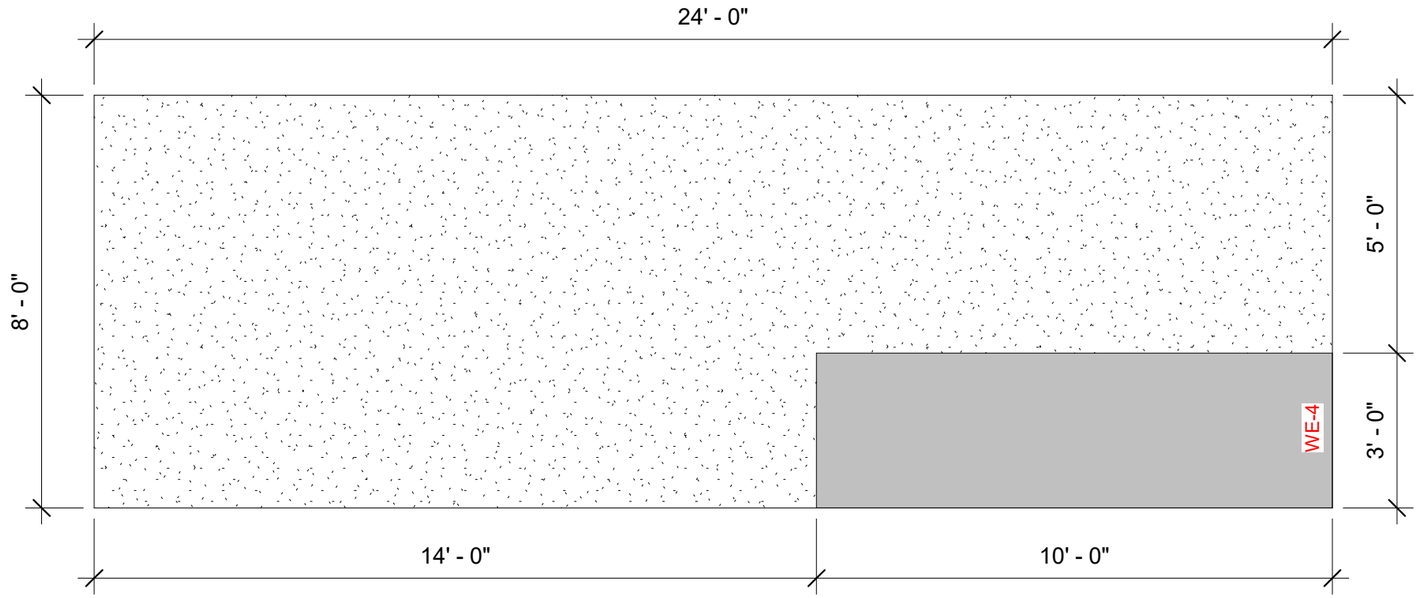

Exploitation: 15.63% - Waste: 84.37%

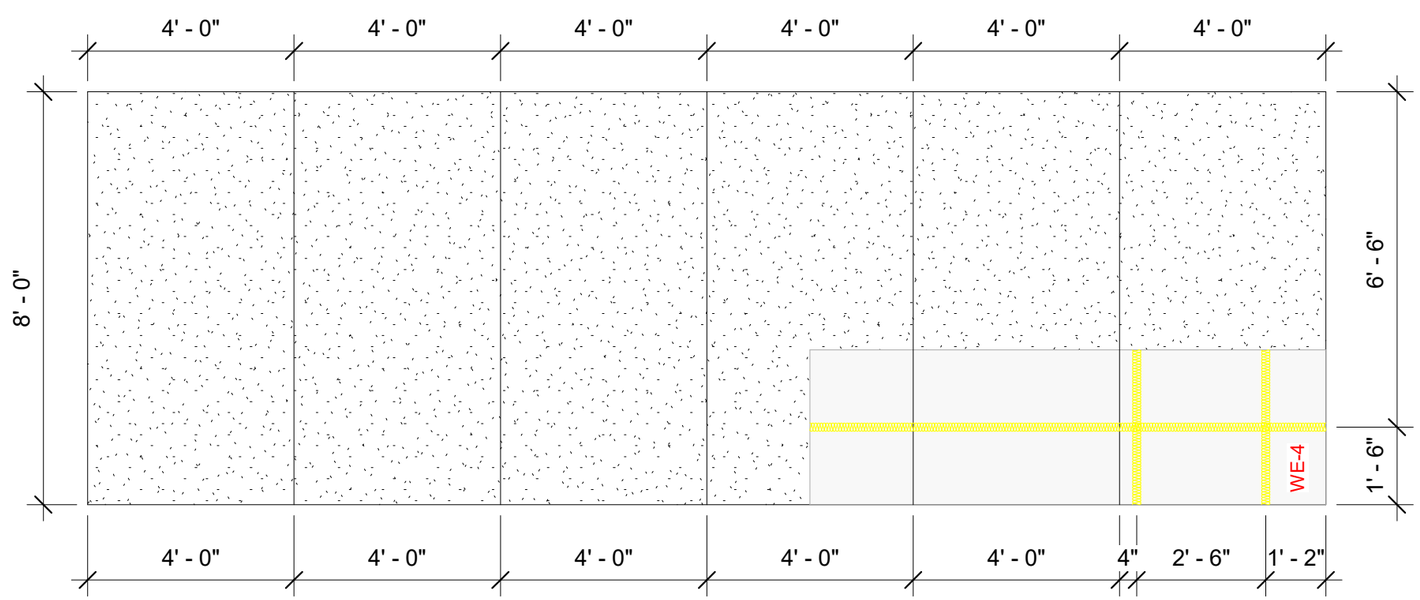

PREFLEX

ADU 20X32

PREFLEX HOMES

No.	Description	Date

Wall 4"_Cutting Panel 7

Project number	
Date	Ago/29/2022
Drawn by	OD
Checked by	Verificador
A306	
Scale	3/8" = 1'-0"

19/09/2022 04:58:20 p. m.

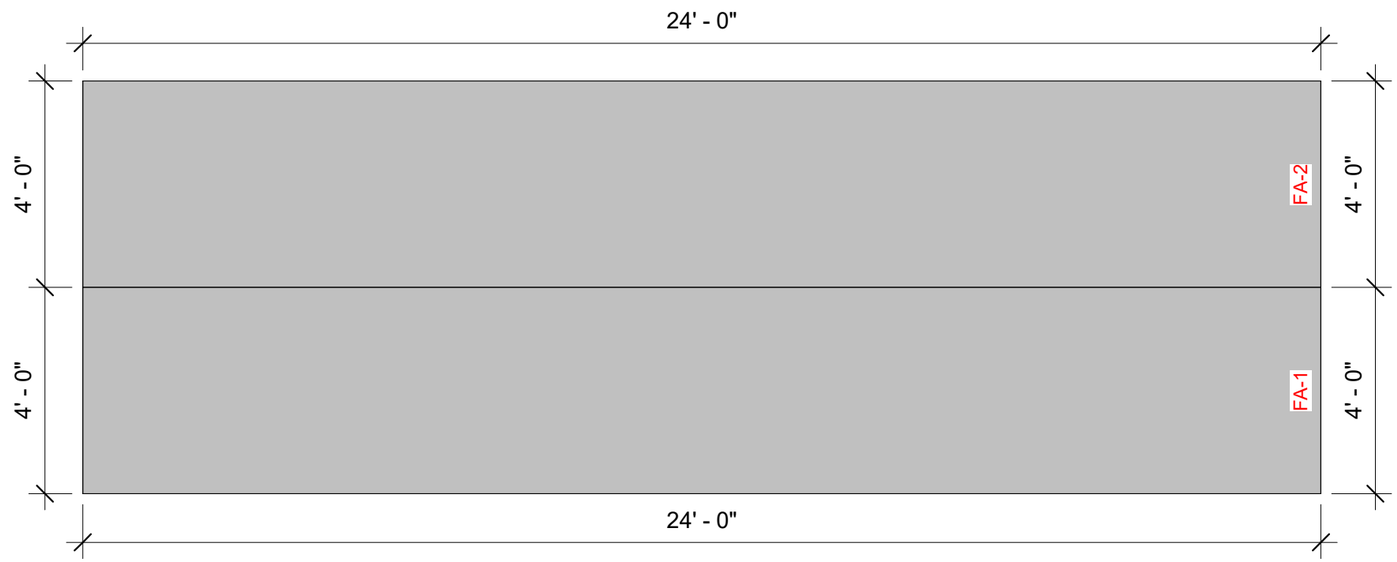

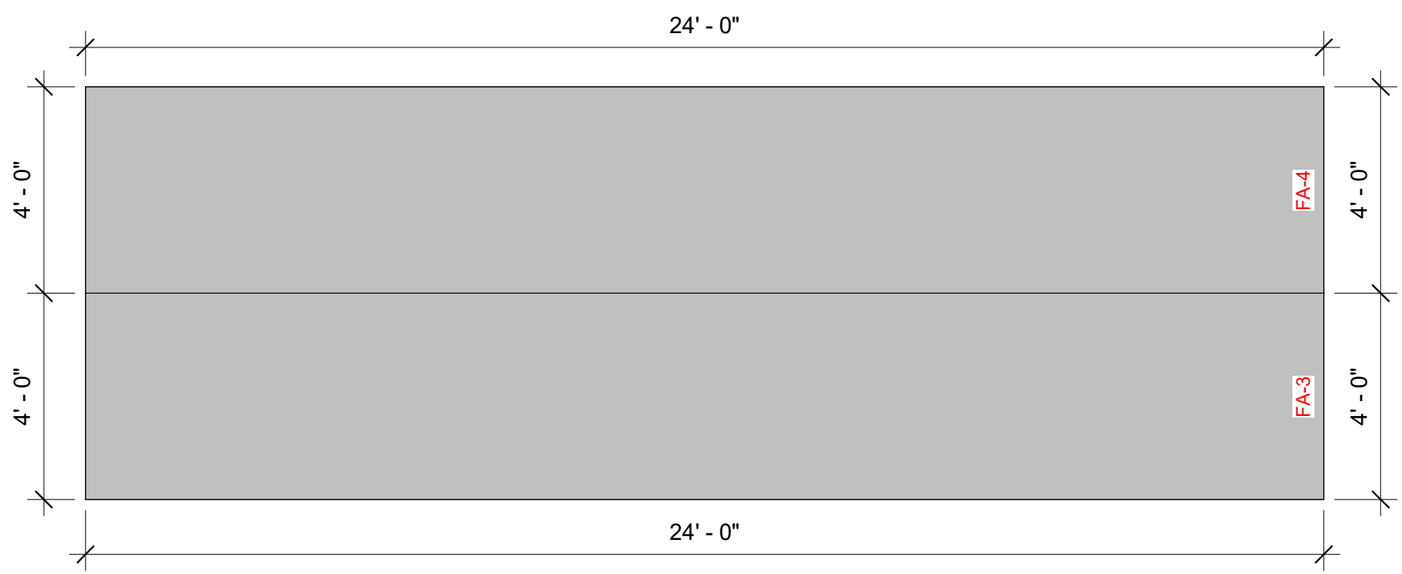

PREFLEX

ADU 20X32

PREFLEX HOMES

No.	Description	Date

Floor
6"_Cutting
Panel 8-9

Project number	
Date	Ago/29/2022
Drawn by	OD
Checked by	Verificador
A307	
Scale	3/8" = 1'-0"

19/09/2022 04:58:21 p. m.

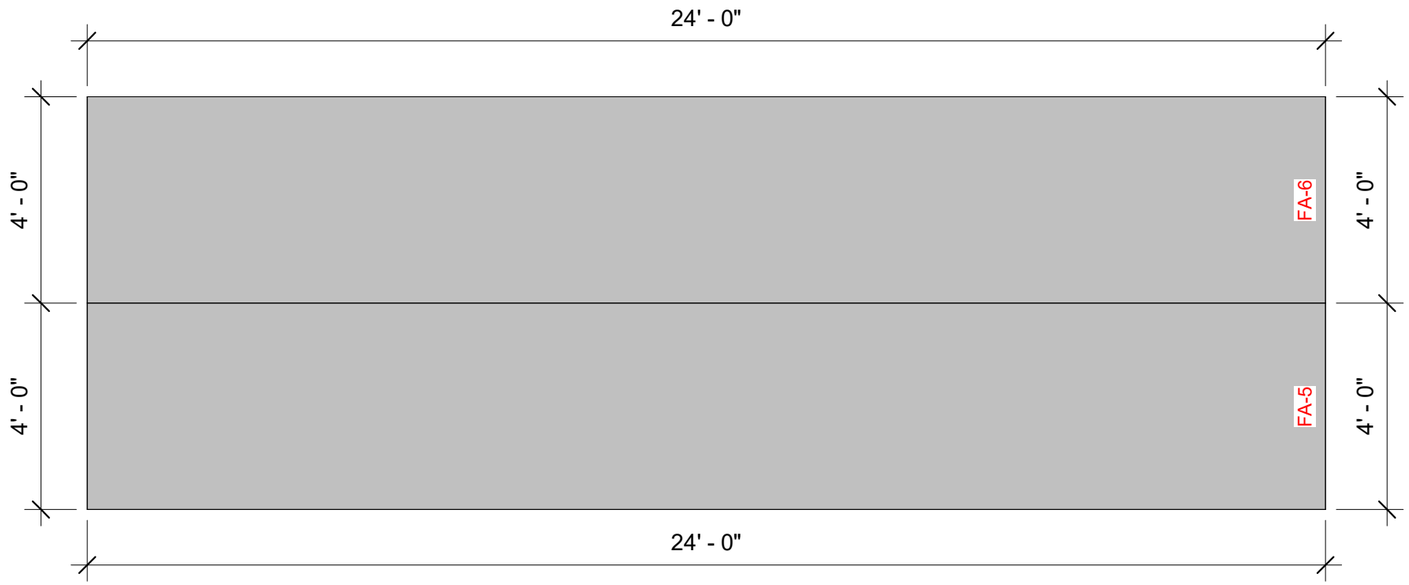

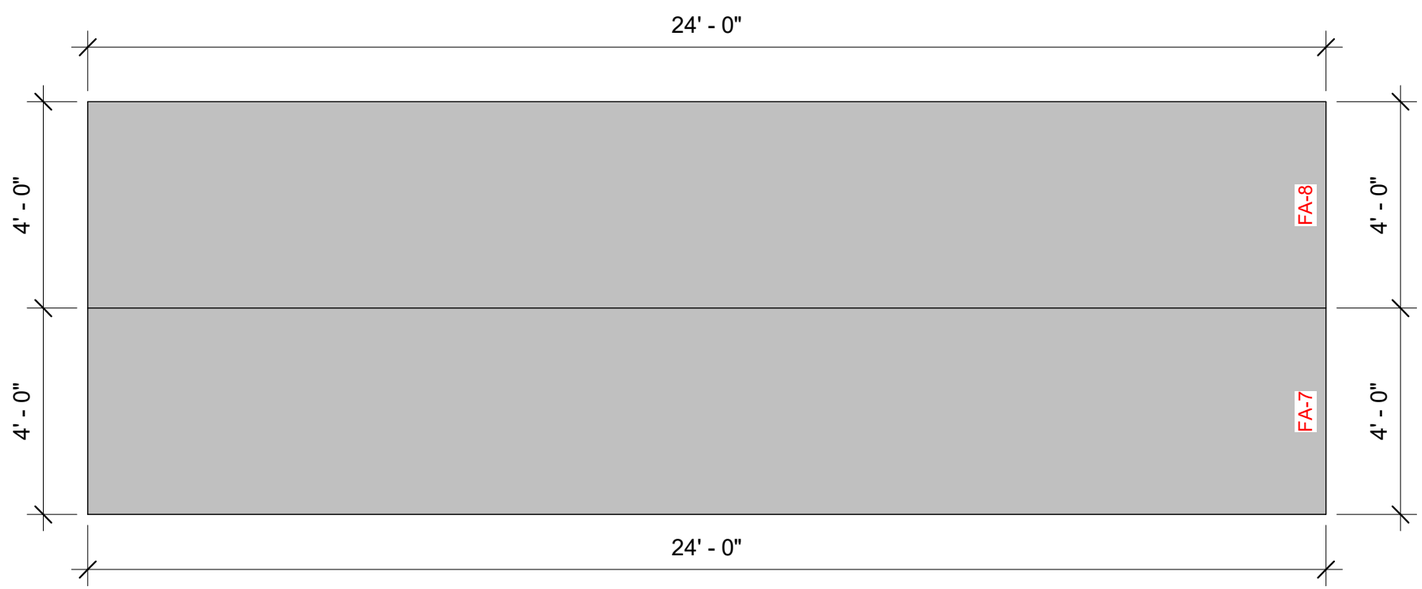

PREFLEX

ADU 20X32

PREFLEX HOMES

No.	Description	Date

Floor
6"_Cutting
Panel 10-11

Project number	
Date	Ago/29/2022
Drawn by	OD
Checked by	Verificador
A308	
Scale	3/8" = 1'-0"

19/09/2022 04:58:21 p. m.

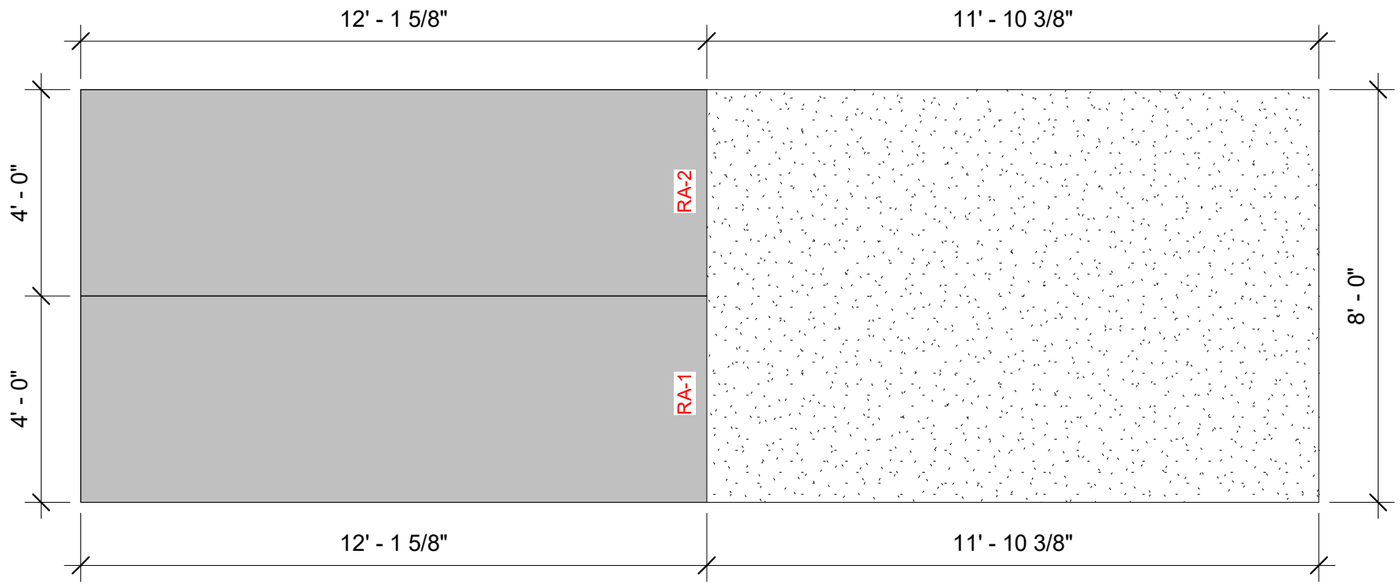

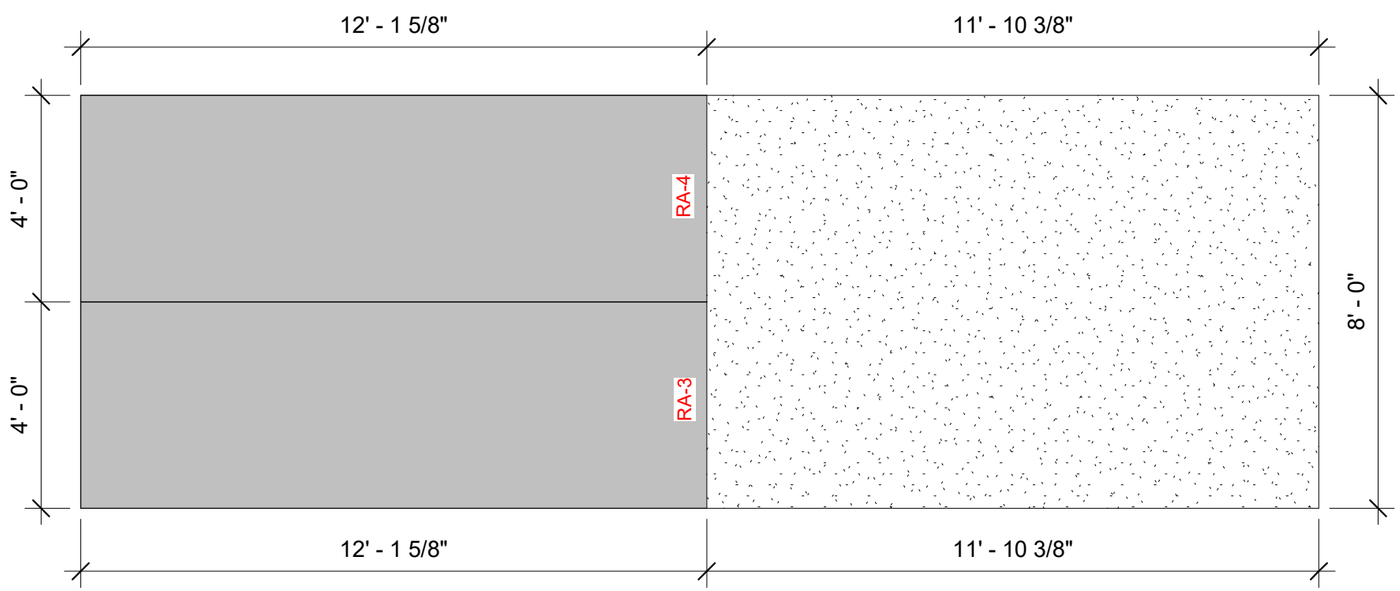

PREFLEX

ADU 20X32

PREFLEX HOMES

No.	Description	Date

Roof
8"_Cutting
Panel 12-13

Project number	
Date	Ago/29/2022
Drawn by	OD
Checked by	Verificador
A309	
Scale	3/8" = 1'-0"

19/09/2022 04:58:21 p. m.

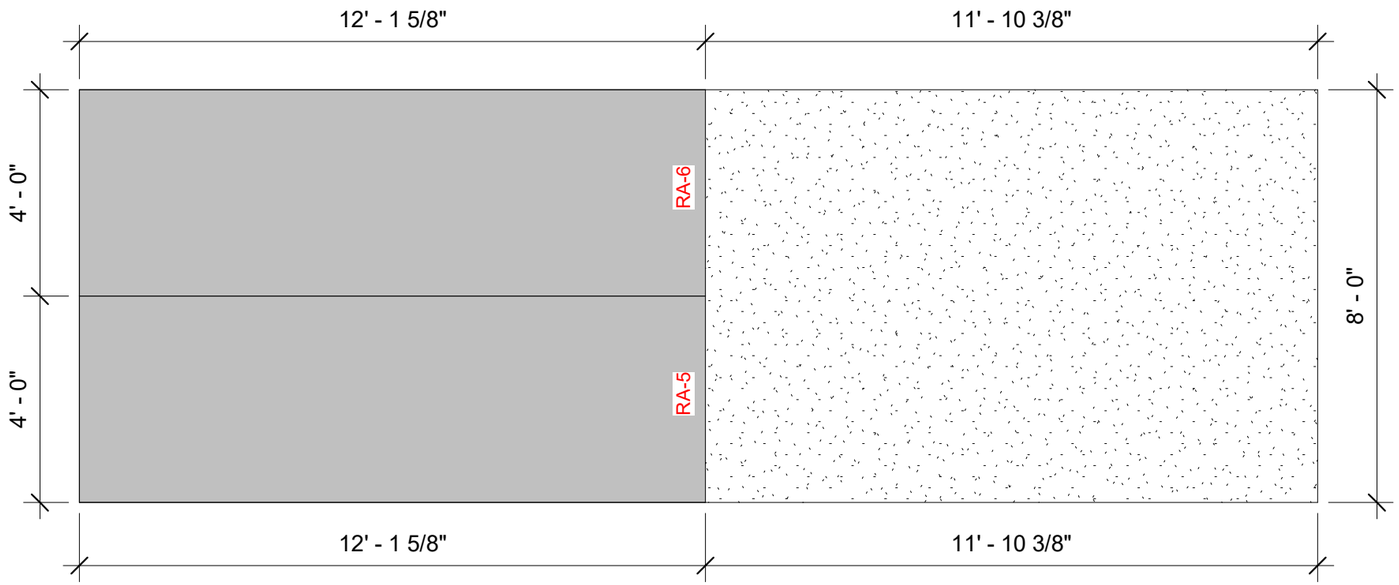

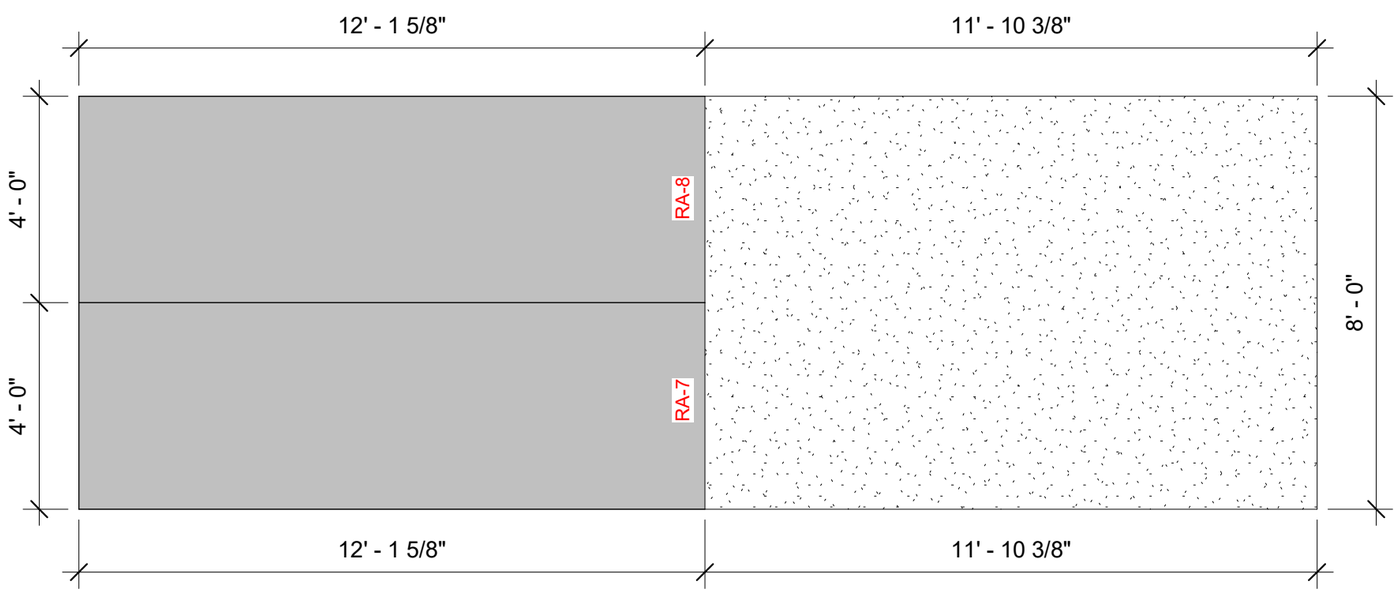

PREFLEX

ADU 20X32

PREFLEX HOMES

No.	Description	Date

Roof
8"_Cutting
Panel 14-15

Project number	
Date	Ago/29/2022
Drawn by	OD
Checked by	Verificador
A310	
Scale	3/8" = 1'-0"

19/09/2022 04:58:22 p. m.

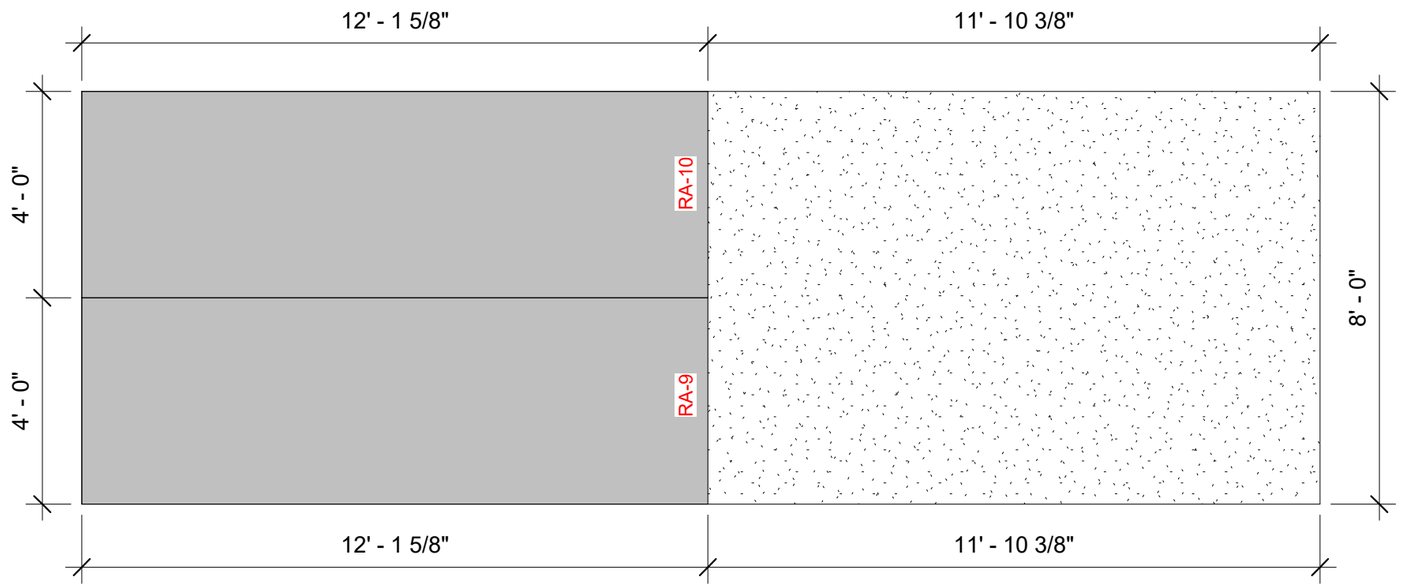

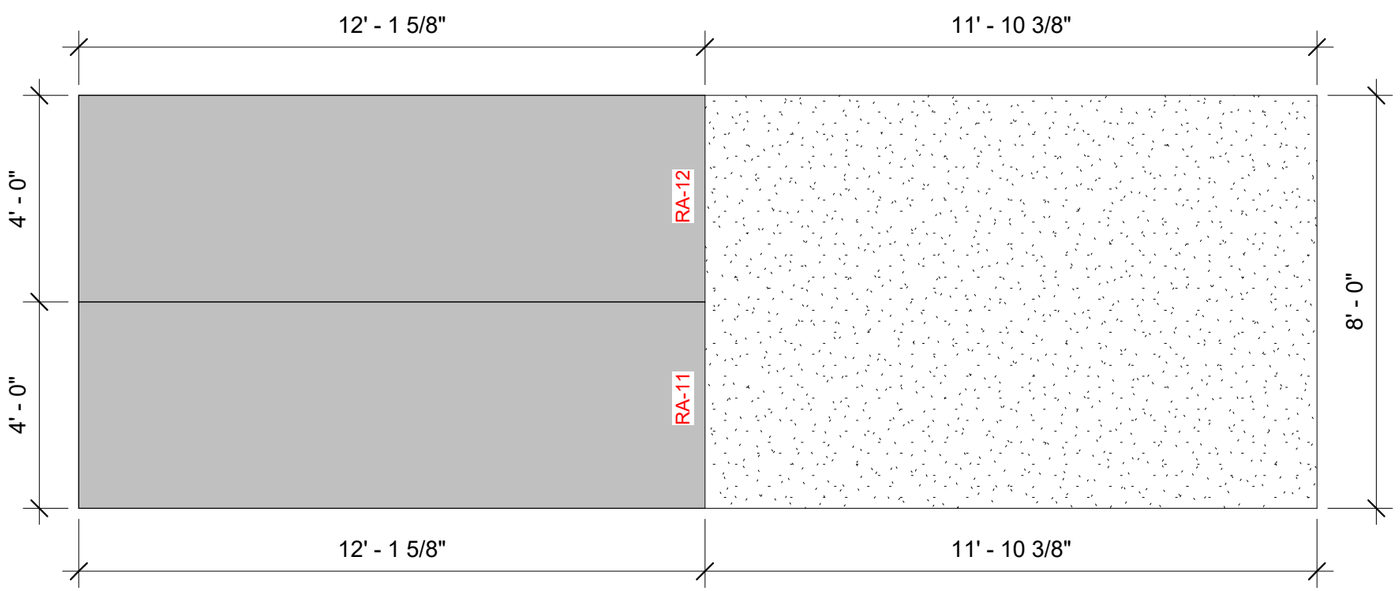

PREFLEX

ADU 20X32

PREFLEX HOMES

No.	Description	Date

Roof
8"_Cutting
Panel 16-17

Project number	
Date	Ago/29/2022
Drawn by	OD
Checked by	Verificador
A311	
Scale	3/8" = 1'-0"

19/09/2022 04:58:22 p. m.

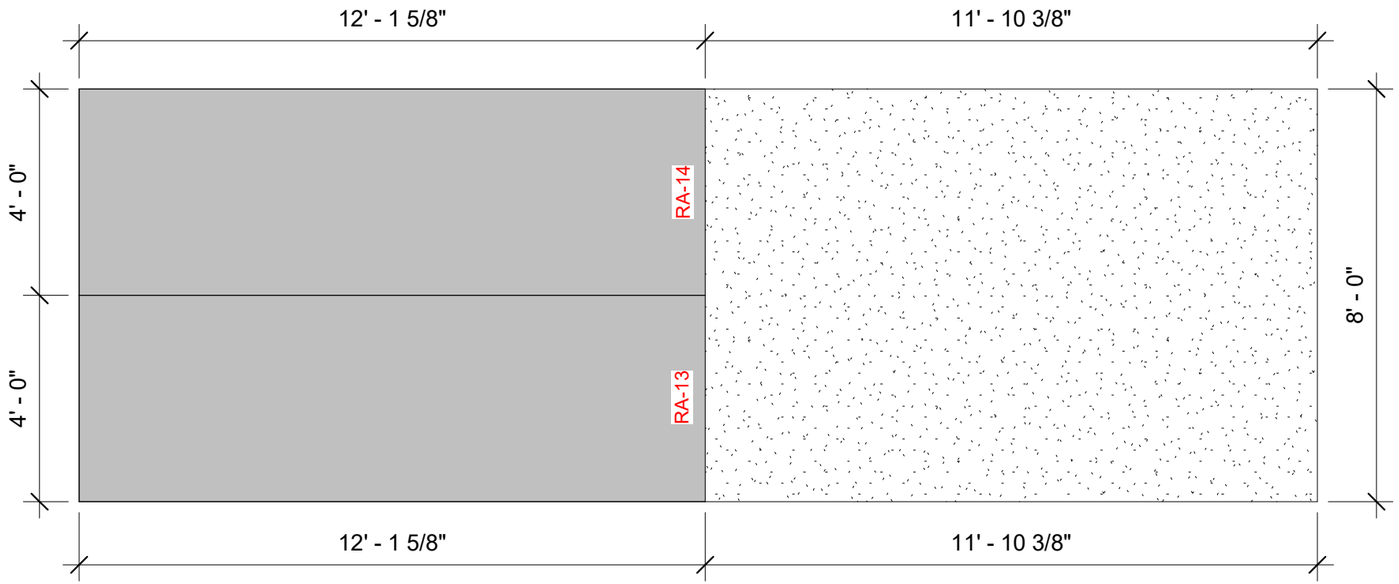

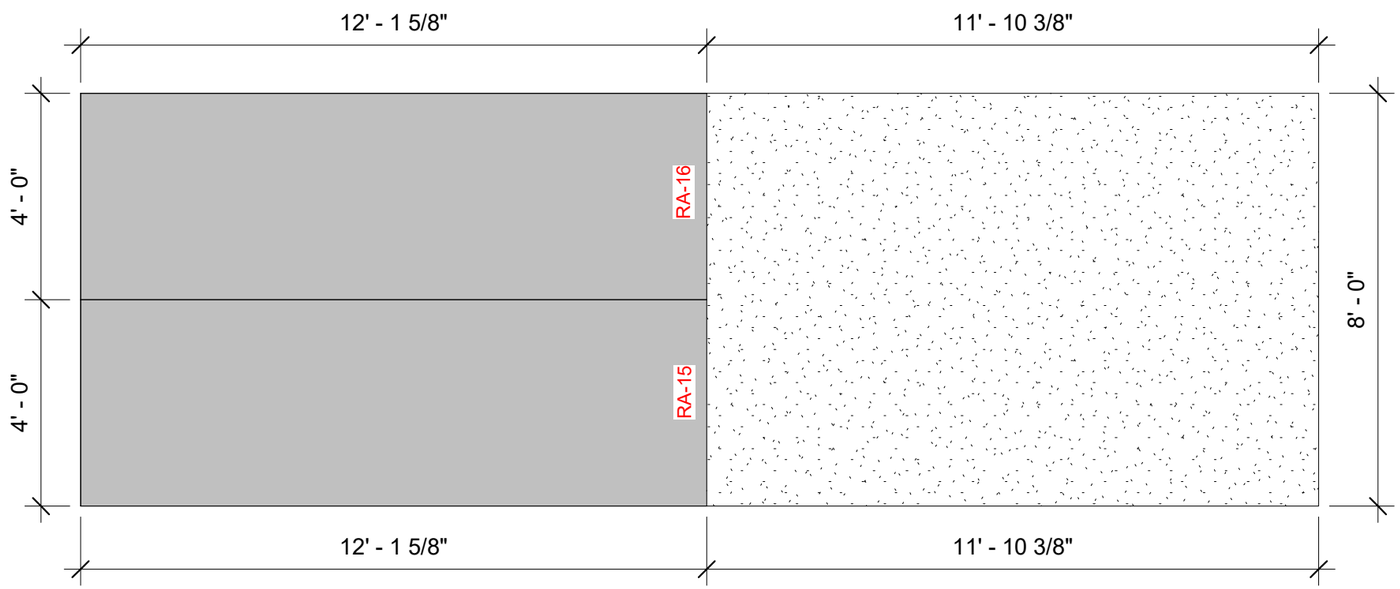

PREFLEX

ADU 20X32

PREFLEX HOMES

No.	Description	Date

Roof
8"_Cutting
Panel 18-19

Project number	
Date	Ago/29/2022
Drawn by	OD
Checked by	Verificador
A312	
Scale	3/8" = 1'-0"

19/09/2022 04:58:22 p. m.

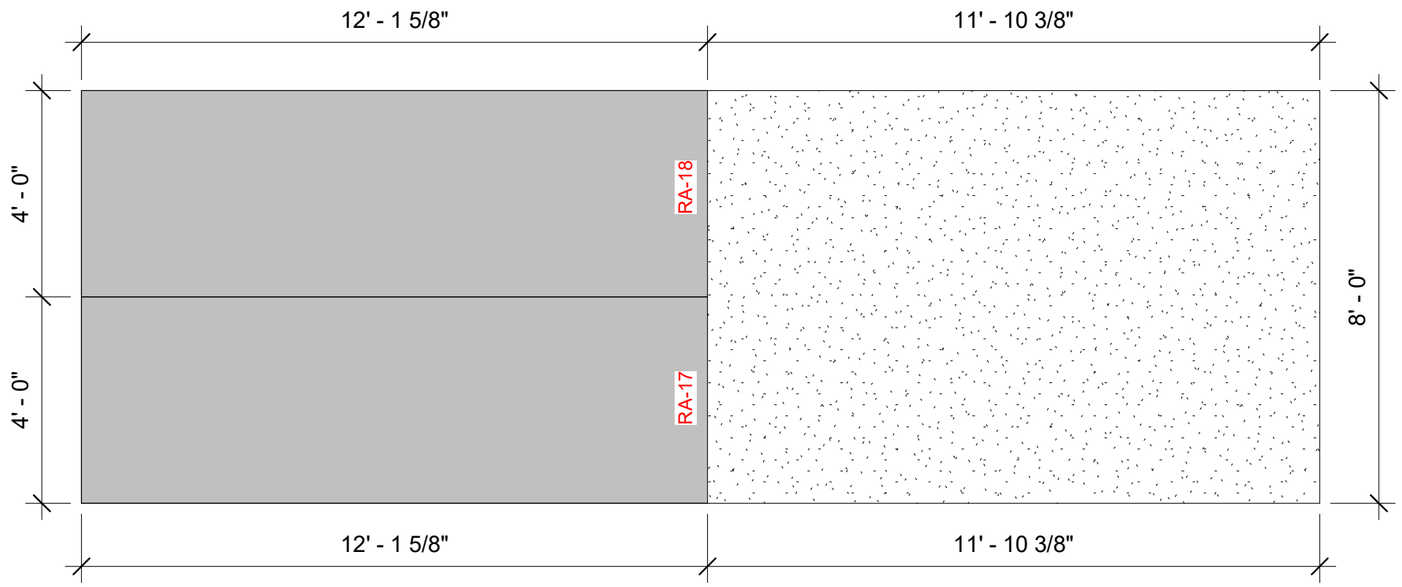

PREFLEX

ADU 20X32

PREFLEX HOMES

No.	Description	Date

Roof
8"_Cutting
Panel 20

Project number	
Date	Ago/29/2022
Drawn by	OD
Checked by	Verificador
A313	
Scale	3/8" = 1'-0"

19/09/2022 04:58:23 p. m.